US009410579B2

(12) **United States Patent**
Bouron et al.

(10) **Patent No.: US 9,410,579 B2**
(45) **Date of Patent: Aug. 9, 2016**

(54) **CAGE WITH PARALLEL POCKETS FOR ROLLING BEARING**

(71) Applicant: **Aktiebolaget SKF**, Göteborg (SE)

(72) Inventors: **Cyril Bouron**, Puits de Courson (FR); **Jean-Baptiste Magny**, Migé (FR); **Pascal Ovize**, Chitry le Fort (FR); **Pascal Vioux**, Provency (FR)

(73) Assignee: **AKTIEBOLAGET SKF**, Gothenburg (SE)

(*) Notice: Subject to any disclaimer, the term of this patent is extended or adjusted under 35 U.S.C. 154(b) by 0 days.

(21) Appl. No.: **14/257,454**

(22) Filed: **Apr. 21, 2014**

(65) **Prior Publication Data**

US 2015/0267749 A1 Sep. 24, 2015

(30) **Foreign Application Priority Data**

Apr. 19, 2013 (EP) 13164516

(51) **Int. Cl.**

F16C 33/48	(2006.01)
F16C 33/46	(2006.01)
F16C 19/36	(2006.01)
F16C 33/51	(2006.01)

(52) **U.S. Cl.**

CPC ***F16C 33/467*** (2013.01); ***F16C 19/362*** (2013.01); ***F16C 33/4635*** (2013.01); ***F16C 33/513*** (2013.01); *F16C 2220/04* (2013.01)

(58) **Field of Classification Search**

CPC F16C 19/362; F16C 29/04; F16C 33/51; F16C 33/513; F16C 33/516; F16C 33/4635; F16C 33/467

USPC 384/51, 548, 572, 573, 576

See application file for complete search history.

(56) **References Cited**

U.S. PATENT DOCUMENTS

2,349,824	A	*	5/1944	Irasek	384/623
2,430,359	A	*	11/1947	Messinger	384/622
2,628,137	A		2/1953	Ashton	
4,065,192	A		12/1977	Sague	
4,755,065	A		7/1988	Walter	
4,915,513	A	*	4/1990	Orain	384/447
6,547,441	B2	*	4/2003	Kato	384/447
7,073,948	B2	*	7/2006	Neder et al.	384/447
2011/0249931	A1	*	10/2011	Omoto et al.	384/572

FOREIGN PATENT DOCUMENTS

EP	2065604	A1		6/2009
FR	1226229	A		7/1960
GB	2099089		*	5/1982
GB	2099089	A		12/1982
WO	WO2011162729		*	12/2011

* cited by examiner

Primary Examiner — James Pilkington

(74) *Attorney, Agent, or Firm* — Bryan Peckjian; SKF USA Inc. Patent Dept.

(57) **ABSTRACT**

A cage for a rolling bearing including a plurality of cage segments is provided. Each segment has a first set of pockets for a first set of rollers, and a second set of pockets for a second set of rollers. The axes of the pockets of the first set of pockets are parallel with each other and the axes of the pockets of the second set of pockets are parallel with each other.
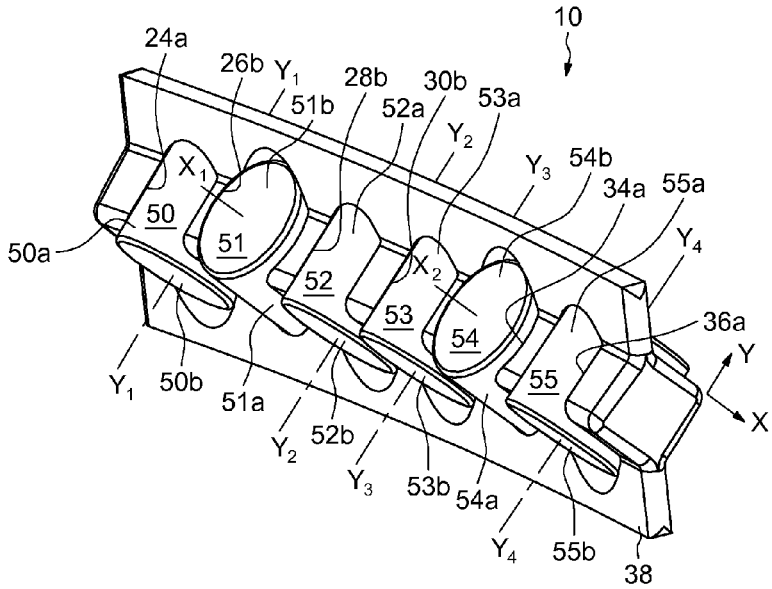
9 Claims, 2 Drawing Sheets