US009410479B2

(12) **United States Patent**
West et al.

(10) **Patent No.: US 9,410,479 B2**
(45) **Date of Patent: Aug. 9, 2016**

(54) **METHOD FOR ADJUSTING THE OPERATION OF A TURBOMACHINE RECEIVING A RECIRCULATED EXHAUST GAS**

(75) Inventors: **James A. West**, Simpsonville, SC (US); **Rex A. Morgan**, Simpsonville, SC (US); **Lewis B. Davis, Jr.**, Niskayuna, NY (US); **Sam D. Draper**, Simpsonville, SC (US); **Amit Toprani**, Greenville, SC (US)

(73) Assignee: **General Electric Company**, Schenectady, NY (US)

(*) Notice: Subject to any disclaimer, the term of this patent is extended or adjusted under 35 U.S.C. 154(b) by 2359 days.

(21) Appl. No.: **11/959,975**

(22) Filed: **Dec. 19, 2007**

(65) **Prior Publication Data**

US 2009/0158734 A1 Jun. 25, 2009

(51) **Int. Cl.**

F02C 3/34	(2006.01)
F01K 23/10	(2006.01)
F02C 9/16	(2006.01)

(52) **U.S. Cl.**

CPC ***F02C 3/34*** (2013.01); ***F01K 23/101*** (2013.01); ***F02C 9/16*** (2013.01); *F05D 2270/303* (2013.01); *Y02E 20/16* (2013.01)

(58) **Field of Classification Search**

CPC F02C 3/34; F02C 1/08; F02C 9/16; F01D 25/30; F01K 23/101

USPC 60/39.52, 39.5, 793, 272

See application file for complete search history.

(56) **References Cited**

U.S. PATENT DOCUMENTS

6,202,400	B1 *	3/2001	Utamura et al.	60/773
6,843,055	B2 *	1/2005	Ootake	60/297
6,895,752	B1 *	5/2005	Holtman et al.	60/605.2
2002/0043063	A1 *	4/2002	Kataoka et al.	60/39.182
2004/0065088	A1 *	4/2004	Viteri et al.	60/772
2004/0123601	A1	7/2004	Fan	
2005/0066659	A1 *	3/2005	Super et al.	60/605.2
2005/0076645	A1 *	4/2005	Frutschi et al.	60/772

FOREIGN PATENT DOCUMENTS

CN	1207453	A	2/1999
JP	11050811	A	2/1999
JP	2003222043	A	8/2003

OTHER PUBLICATIONS

Office Action from JP Application No. 2008-315244 dated Feb. 19, 2013, along with unofficial translation.

Search Report and Written Opinion from CN Application No. 200810183983.1 dated Oct. 19, 2012.

* cited by examiner

Primary Examiner — Craig Kim

(74) *Attorney, Agent, or Firm* — Ernest G. Cusick; Frank A. Landgraff

(57) **ABSTRACT**

A method for adjusting the operation of a turbomachine integrated with an exhaust gas recirculation (EGR) system is provided. The method may utilize the composition of an inlet fluid entering the turbomachine. The method may also utilize a variety of turbomachine operating data.
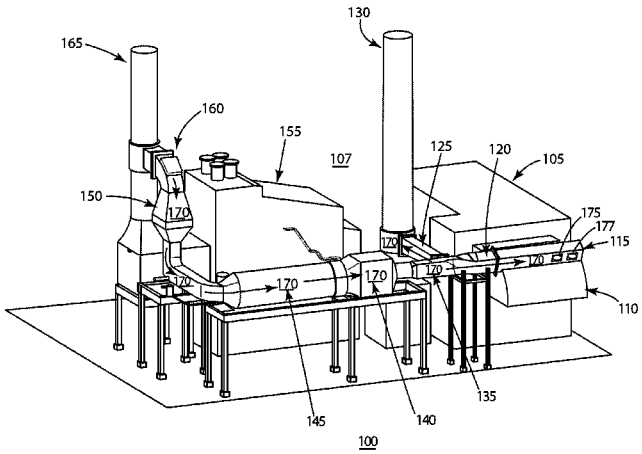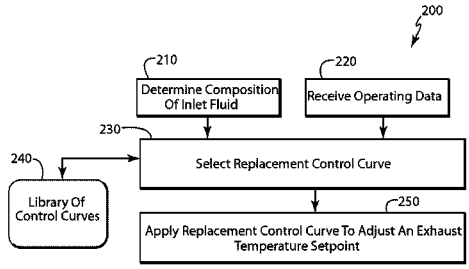
13 Claims, 4 Drawing Sheets