FIG. 1

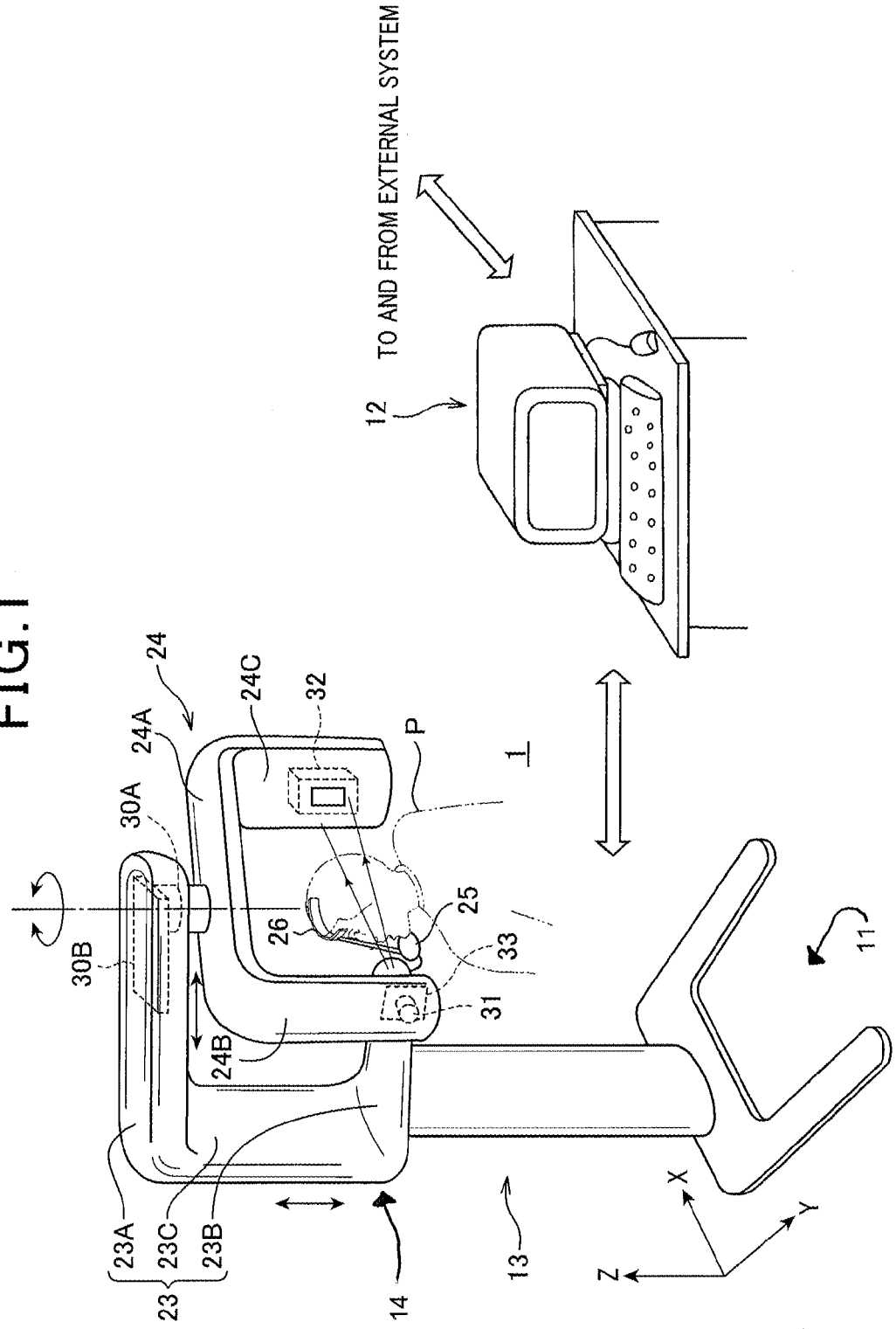
TO AND FROM EXTERNAL SYSTEM
12
24
24A
24C
32
P
1
30A
30B
25
26
33
31
24B
11
23A
23C
23B
23
14
13
X
Y
Z