April 9, 1935. C. P. WELLMAN 1,996,778

RECEPTACLE

Filed Oct. 18, 1929 2 Sheets-Sheet 1

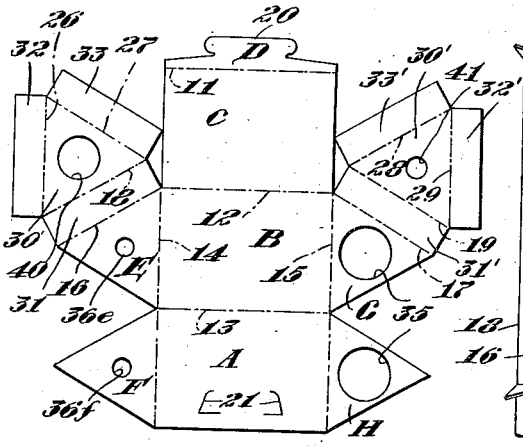

Fig. 1

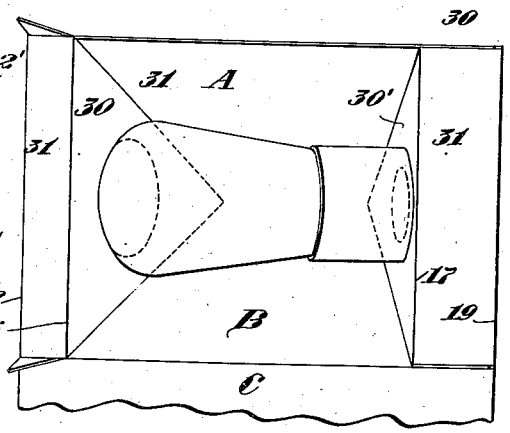

Fig. 2

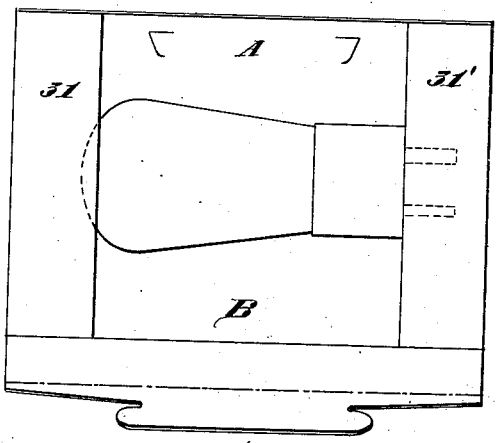

Fig. 3

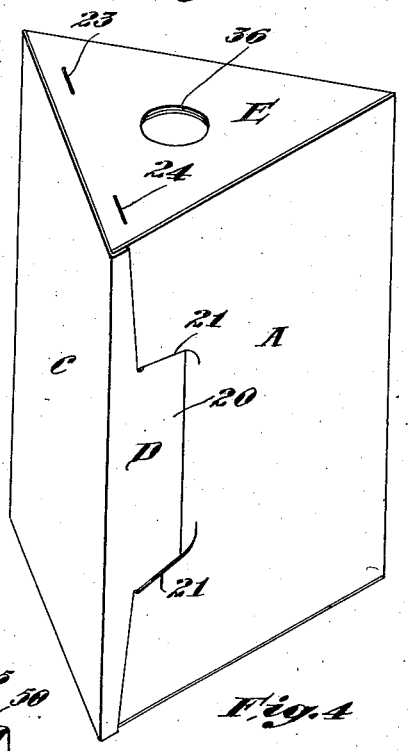

Fig. 4

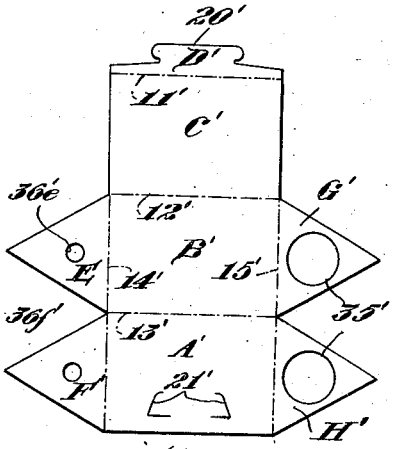

Fig. 5

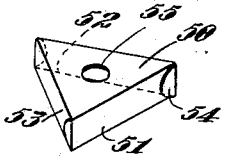

Fig. 6

Inventor
Charles P. Wellman
by Roberts, Cushman & Woodberry
Attorneys