US006096078A

United States Patent [19]

McDonald

[11] **Patent Number: 6,096,078**

[45] **Date of Patent: Aug. 1, 2000**

[54] **ACCOMMODATIVE LENS IMPLANTATION**

[75] Inventor: **Henry H. McDonald**, Rancho Mirage, Calif.

[73] Assignee: **Surgical Concepts, Inc.**, Newport Beach, Calif.

[21] Appl. No.: **09/198,254**

[22] Filed: **Nov. 24, 1998**

Related U.S. Application Data

[63] Continuation of application No. 08/954,656, Oct. 20, 1997, Pat. No. 5,843,188.

[51] **Int. Cl.**[7] **A61F 2/16**

[52] **U.S. Cl.** **623/6.22**; 623/6.37

[58] **Field of Search** 623/6, 6.22, 6.11

[56] **References Cited**

U.S. PATENT DOCUMENTS

4,198,714	4/1980	Jensen .	
4,304,012	12/1981	Richard	623/6
4,414,694	11/1983	Choyce .	
4,441,217	4/1984	Cozean, Jr. .	
4,573,998	3/1986	Mazzocco .	
4,585,456	4/1986	Blackmore	623/6
4,605,409	8/1986	Kelman .	
4,731,078	3/1988	Stoy et al. .	
4,769,035	9/1988	Kelman .	
4,786,445	11/1988	Portnoy et al. .	
4,790,846	12/1988	Christ et al. .	
4,813,957	3/1989	McDonald .	
4,816,031	3/1989	Pfoff	623/6
4,834,751	5/1989	Knight et al. .	
4,840,627	6/1989	Blumenthal .	
4,842,602	6/1989	Nguyen .	
4,880,426	11/1989	Ting et al. .	
4,888,013	12/1989	Ting et al. .	
4,888,014	12/1989	Nguyen .	
4,894,062	1/1990	Knight et al. .	
4,932,970	6/1990	Portney .	
4,938,767	7/1990	Ting et al. .	
4,957,505	9/1990	McDonald .	
4,959,070	9/1990	McDonald .	
4,978,354	12/1990	Van Gent .	
5,030,231	7/1991	Portney .	
5,044,743	9/1991	Ting .	
5,098,444	3/1992	Feaster	623/6
5,108,429	4/1992	Wiley	623/6
5,171,266	12/1992	Wiley et al.	623/6
5,203,788	4/1993	Wiley	623/6
5,203,789	4/1993	McDonald .	
5,203,790	4/1993	McDonald .	
5,217,464	6/1993	McDonald .	
5,258,025	11/1993	Fedorov	623/6
5,395,378	3/1995	McDonald .	
5,405,385	4/1995	Heimke et al.	623/6
5,476,514	12/1995	Cumming .	
5,480,428	1/1996	Fedorov et al.	623/6
5,578,081	11/1996	McDonald .	
5,800,530	9/1998	Rizzo	623/6.22

FOREIGN PATENT DOCUMENTS

4131229	1/1993	Germany .

OTHER PUBLICATIONS

"Polyseudophakia" by Harry B. Grabow published Jul., 1977, pp. 1–6.

"Achieving Emmetropia in Extremely Short Eyes With Two Piggyback Posterior Chamber Intraocular Lenses", by Jack T.
Holladay et al, published in "Ophthalmology", vol. 103, No. 7 Jul., 1996, pp. 1118–1123.

"Two Iols Better Than One For High Hyperopes" by Leslie Sabbagh, published Nov. 1, 1994, Ophthalmology Times.

"Implanting Two Posterior Chamber Intraocular Lenses in Microthalmos" by Dr. J. L. Gayton, published in "Ocular Surgery News", 1994, pp. 64 & 65.

Primary Examiner—David H. Willse
Attorney, Agent, or Firm—William W. Haefliger

[57] **ABSTRACT**

A method of providing an artificial lens inserted into the eye between the iris and the natural lens zone, there being eye ciliary muscles located peripherally of the zone, that includes providing the artificial lens to be compliant and to have anterior and posterior surfaces, and haptics extending away from the periphery of the artificial lens; and inserting the artificial lens to extend into position between the iris and the zone, and to cause the haptics to extend into adjacency to the ciliary muscles, and; allowing the haptics to adhere to the ciliary muscles; whereby subsequent movement of the ciliary muscles causes movement of the haptics transmitted to effect bodily movement of the lens in posterior and anterior directions to change the angularity of refraction of light passing through the lens toward the eye retina.
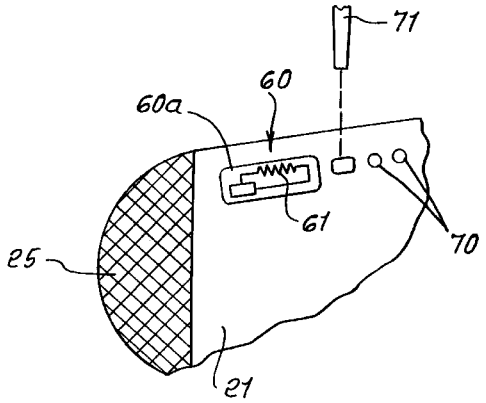
7 Claims, 3 Drawing Sheets