US005395378A

United States Patent [19]

McDonald

[11] Patent Number: 5,395,378

[45] Date of Patent: Mar. 7, 1995

[54] EYE IMPLANTABLE LENS HAPTICS INSERTION AND TWIST APPARATUS

[75] Inventor: **Henry H. McDonald**, 800 E. Colorado Blvd., Suite 450, Pasadena, Calif. 91101

[73] Assignees: **Henry H. McDonald; William W. Haefliger**, both of Pasadena, Calif. ; a part interest

[21] Appl. No.: **110,185**

[22] Filed: **Aug. 20, 1993**

Related U.S. Application Data

[63] Continuation-in-part of Ser. No. 884,904, May 18, 1992, Pat. No. 5,242,450.

[51] **Int. Cl.**[6] **A61F 9/00**

[52] **U.S. Cl.** **606/107**; 606/205; 623/6

[58] **Field of Search** 623/4–6; 606/107, 205, 206, 207, 210, 211

[56] **References Cited**

U.S. PATENT DOCUMENTS

3,882,872	5/1975	Douvas et al. .	
4,190,049	2/1980	Hager et al. .	
4,530,117	7/1985	Kelman	623/6
4,573,998	3/1986	Mazzocco	623/6
4,759,359	7/1988	Willis et al.	623/6 X
4,813,957	3/1989	McDonald	623/6
4,844,065	7/1989	Faulkner .	
4,888,015	12/1989	Domino	623/6
4,917,680	4/1990	Poley	623/6
4,919,130	4/1990	Stoy et al.	606/107
4,934,363	6/1990	Smith et al.	606/107
4,957,505	9/1990	McDonald	623/6
5,047,049	9/1991	Salai	606/205
5,098,439	3/1992	Hill et al.	606/107
5,147,369	9/1992	Wagner	606/107
5,203,789	4/1993	McDonald	623/6
5,203,790	4/1993	McDonald	623/6
5,217,464	6/1993	McDonald	606/107
5,242,450	9/1993	McDonald	606/107

FOREIGN PATENT DOCUMENTS

3305326	8/1984	Germany .
3816059	11/1989	Germany .

Primary Examiner—Randall L. Green
Assistant Examiner—Mary Beth Jones
Attorney, Agent, or Firm—William W. Haefliger

[57] **ABSTRACT**

Surgical apparatus useful for eye surgery, wherein an incision is made in the eye corneo-scleral tissue, and via which a plastic lens is to be introduced into an eye lens zone in a capsule from which a natural lens has been removed, the lens having haptic structure including haptics attached thereto comprising a surgical forceps having two longitudinally elongated, laterally spaced arms and two blades, the arms extending in parallel relation, each blade integral with an arm at the forward end thereof, each blade being blunt at the forward end thereof; whereby the forceps may be displaced to controllably receive a haptic or lens, or both, between the blades and to controllably displace the haptic or lens, or both, for positioning the haptics and lens in the capsule; and a tube receiving the forceps, with the blades positioned to engage and displace the haptic and lens, in the tube.
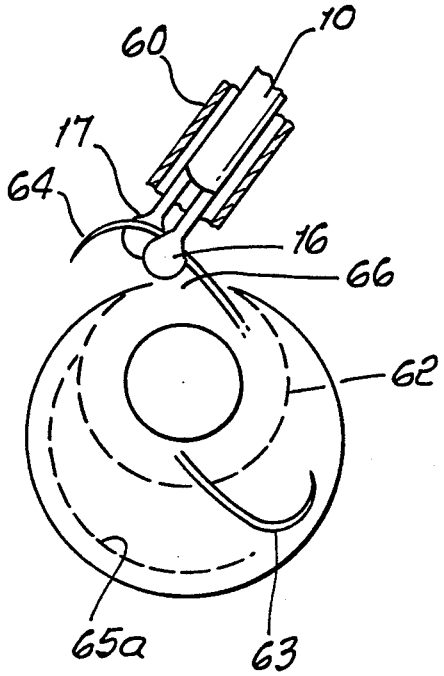
10 Claims, 4 Drawing Sheets