Nov. 16, 1954 J. SCHNAIBLE 2,694,378

TAPE COATING AND APPLYING APPARATUS

Filed Sept. 12, 1952 2 Sheets-Sheet 1

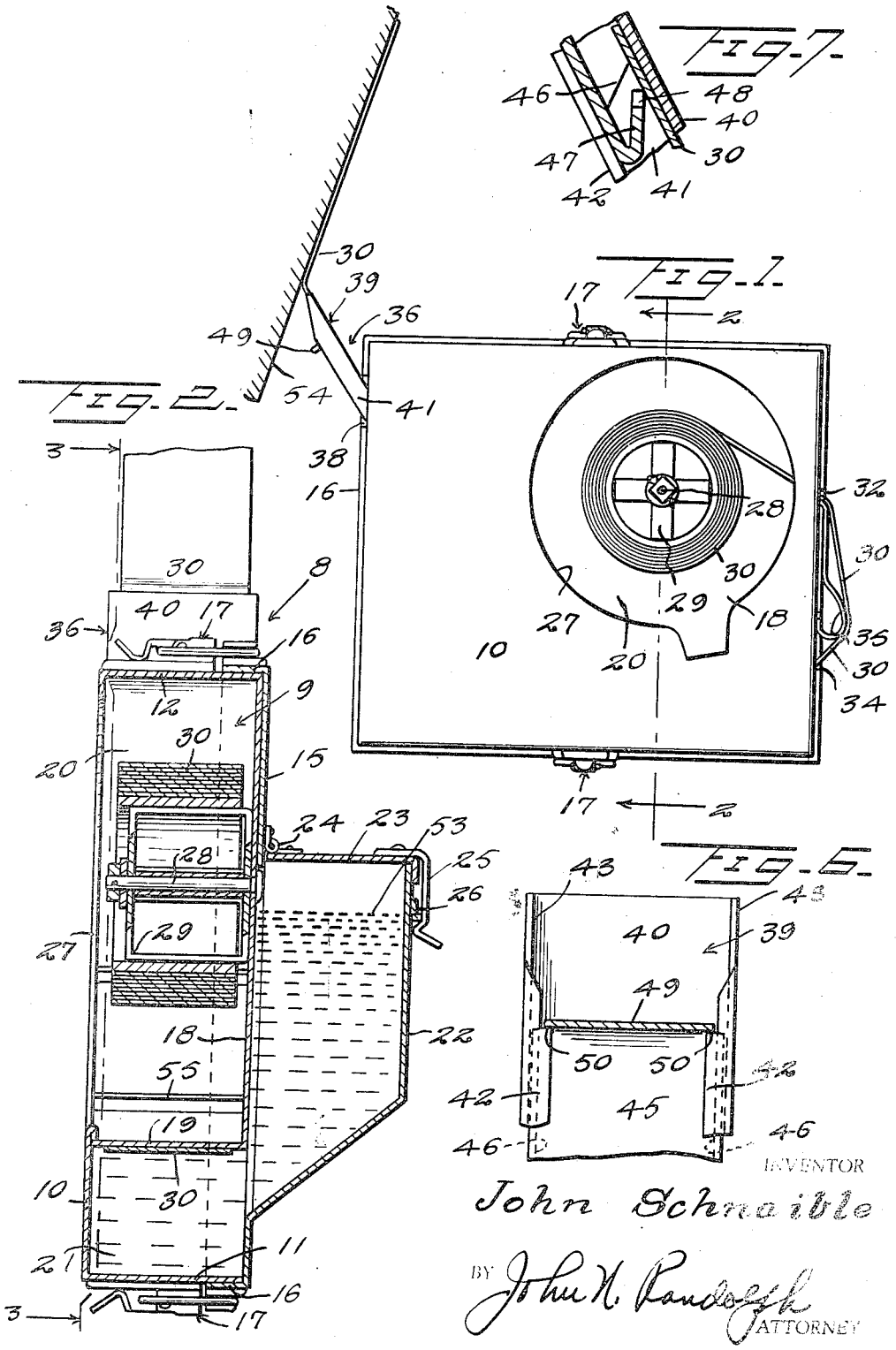

INVENTOR
John Schnaible
BY John H. Randolph
ATTORNEY