US009383778B2

(12) **United States Patent**
Matsuoka

(10) **Patent No.: US 9,383,778 B2**
(45) **Date of Patent: Jul. 5, 2016**

(54) **DISC STYLE 360 DEGREE HINGE FOR A LAPTOP COMPUTER**

(71) Applicant: **GOOGLE INC.**, Mountain View, CA (US)

(72) Inventor: **Yoshimichi Matsuoka**, Cupertino, CA (US)

(73) Assignee: **Google Inc.**, Mountain View, CA (US)

(*) Notice: Subject to any disclaimer, the term of this patent is extended or adjusted under 35 U.S.C. 154(b) by 207 days.

(21) Appl. No.: **14/145,377**

(22) Filed: **Dec. 31, 2013**

(65) **Prior Publication Data**

US 2015/0185788 A1 Jul. 2, 2015

(51) **Int. Cl.**

G06F 1/16	(2006.01)
H05K 5/00	(2006.01)
B21D 53/40	(2006.01)
E05D 3/06	(2006.01)
H05K 5/02	(2006.01)

(52) **U.S. Cl.**

CPC ***G06F 1/1681*** (2013.01); ***B21D 53/40*** (2013.01); ***E05D 3/06*** (2013.01); ***G06F 1/1618*** (2013.01); ***H05K 5/0226*** (2013.01); *E05Y 2900/606* (2013.01); *Y10T 16/52* (2015.01); *Y10T 29/24* (2015.01)

(58) **Field of Classification Search**

CPC G06F 1/1616; G06F 1/1618; G06F 1/162; G06F 1/1622

USPC 361/679.01, 679.02, 679.26, 679.27, 361/679.28, 679.29, 679.3, 679.55, 679.56; 16/221–392

See application file for complete search history.

(56) **References Cited**

U.S. PATENT DOCUMENTS

5,781,409 A * 7/1998 Mecredy, III F28D 15/02 16/223
5,987,704 A * 11/1999 Tang G06F 1/1681 16/342
6,249,426 B1 * 6/2001 O'Neal G06F 1/1616 16/334
6,493,216 B1 12/2002 Lin
7,155,266 B2 12/2006 Stefansen
7,345,872 B2 3/2008 Wang
7,373,692 B2 * 5/2008 Kfoury G06F 1/1622 16/308
7,791,876 B2 * 9/2010 Moore G06F 1/203 16/221
8,302,260 B2 * 11/2012 Chen G06F 1/1681 16/303
2004/0155861 A1 8/2004 Jackson, III

(Continued)

FOREIGN PATENT DOCUMENTS

EP 2202949 A1 6/2010
EP 1698156 B1 5/2011

OTHER PUBLICATIONS

"Aspire S7", Acer, retrieved on Dec. 2, 2013 from us.acer.com/ac/en/US/content/series/aspires7, 2 pages.

(Continued)

Primary Examiner — Anthony Haughton

(74) *Attorney, Agent, or Firm* — Brake Hughes Bellermann LLP

(57) **ABSTRACT**

In one general aspect, a computing device can include a lid, and a base coupled to the lid by a hinge. The hinge can include a first disc including a first pin coupled to the lid and an inner surface. The hinge can include a second disc including a second pin coupled to the base and an outer surface. The first disc can be concentric with and can partially surround the second disc. The hinge can further include a friction element disposed between the inner surface of the first disc and the outer surface of the second disc. The first disc can be configured to rotate about the second disc.
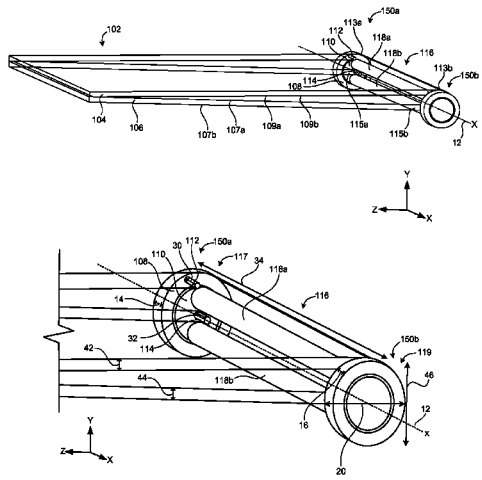
19 Claims, 9 Drawing Sheets