US006783678B2

(12) **United States Patent**
**Sorenson**

(10) **Patent No.: US 6,783,678 B2**
(45) **Date of Patent: Aug. 31, 2004**

(54) **HALOGENATED SOLVENT REMEDIATION**

(75) Inventor: **Kent S. Sorenson**, Idaho Falls, ID (US)

(73) Assignee: **Bechtel BWXT Idaho, LLC**, Idaho Falls, ID (US)

( * ) Notice: Subject to any disclaimer, the term of this patent is extended or adjusted under 35 U.S.C. 154(b) by 336 days.

(21) Appl. No.: **09/895,430**

(22) Filed: **Jun. 29, 2001**

(65) **Prior Publication Data**

US 2002/0020665 A1 Feb. 21, 2002

**Related U.S. Application Data**

(60) Provisional application No. 60/214,957, filed on Jun. 29, 2000, and provisional application No. 60/233,414, filed on Sep. 18, 2000.

(51) **Int. Cl.**[7] ..... **C02F 3/00**
(52) **U.S. Cl.** ..... **210/610**; 435/262.5
(58) **Field of Search** ..... 435/262.5; 210/610

(56) **References Cited**

U.S. PATENT DOCUMENTS

| | | | | |
|---|---|---|---|---|
| 4,585,482 A | | 4/1986 | Tice et al. | 106/15.05 |
| 5,264,018 A | | 11/1993 | Koenigsberg et al. | 71/63 |
| 5,277,815 A | | 1/1994 | Beeman | 210/605 |
| 5,395,419 A | | 3/1995 | Farone et al. | 71/63 |
| 5,434,241 A | | 7/1995 | Kim et al. | 528/354 |
| 5,464,771 A | * | 11/1995 | Bryant et al. | 435/262.5 |
| 5,516,688 A | | 5/1996 | Rothmel | 435/262.5 |
| 5,560,904 A | | 10/1996 | Laugier et al. | 424/78.08 |
| 5,587,317 A | | 12/1996 | Odom | 435/262.5 |
| 5,658,795 A | | 8/1997 | Kato et al. | 435/262.5 |
| 5,833,855 A | | 11/1998 | Saunders | 210/611 |
| 5,840,571 A | | 11/1998 | Beeman et al. | 435/262.5 |
| 5,932,472 A | | 8/1999 | Abdullah | 435/262.5 |
| 5,993,658 A | | 11/1999 | Kato et al. | 210/611 |
| 6,001,252 A | * | 12/1999 | Rice et al. | 210/610 |
| 6,265,205 B1 | * | 7/2001 | Hitchens et al. | 435/262 |
| 6,420,594 B1 | * | 7/2002 | Farone et al. | 560/185 |
| 6,472,198 B1 | * | 10/2002 | Semprini et al. | 435/262.5 |
| 6,562,235 B1 | * | 5/2003 | Newell et al. | 210/601 |
| 6,589,776 B1 | * | 7/2003 | Harkness | 435/262.5 |

FOREIGN PATENT DOCUMENTS

| | | | |
|---|---|---|---|
| WO | WO 99/24367 | 5/1999 | C02F/1/68 |

OTHER PUBLICATIONS

Maymo–Gatell, et al, "Isolation of a Bacterium That Reductively Dechlorinates Tetrachoroethene to Ethene," *Science*, vol. 276, pp. 1568–1571.

Fennell, et al., "Comparison of Butyric Acid, Lactic Acid, and Propionic Acid as Hydrogen Donors for the Reductive Dechlorination of Tetrachloroethene," *Environmental Science & Technology*, vol. 31, No. 3, 1997 pp. 918–926.

(List continued on next page.)

*Primary Examiner*—Chester T. Barry
(74) *Attorney, Agent, or Firm*—Clayton Howarth & Cannon

(57) **ABSTRACT**

Methods for enhancing bioremediation of ground water contaminated with nonaqueous halogenated solvents are disclosed. A preferred method includes adding a composition to the ground water wherein the composition is an electron donor for microbe-mediated reductive dehalogenation of the halogenated solvents and enhances mass transfer of the halogenated solvents from residual source areas into the aqueous phase of the ground water. Illustrative compositions effective in these methods include surfactants such as $C_2$–$C_4$ carboxylic acids and hydroxy acids, salts thereof, esters of $C_2$–$C_4$ carboxylic acids and hydroxy acids, and mixtures thereof. Especially preferred compositions for use in these methods include lactic acid, salts of lactic acid, such as sodium lactate, lactate esters, and mixtures thereof. The microbes are either indigenous to the ground water, or such microbes can be added to the ground water in addition to the composition.
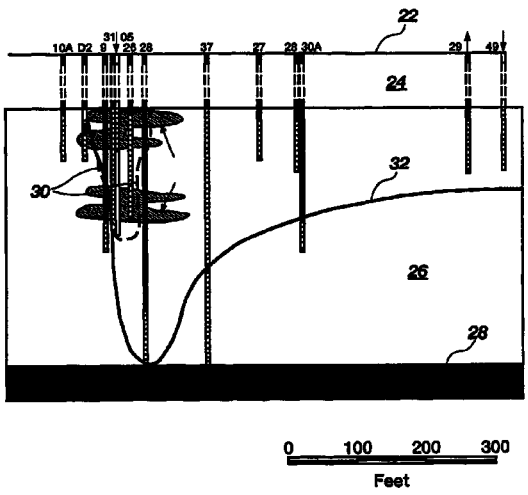
**52 Claims, 5 Drawing Sheets**