May 18, 1965 W. J. KENNEDY, JR 3,183,578

DAMPENING ROLL COVER AND FABRIC THEREFOR

Filed Sept. 26, 1962

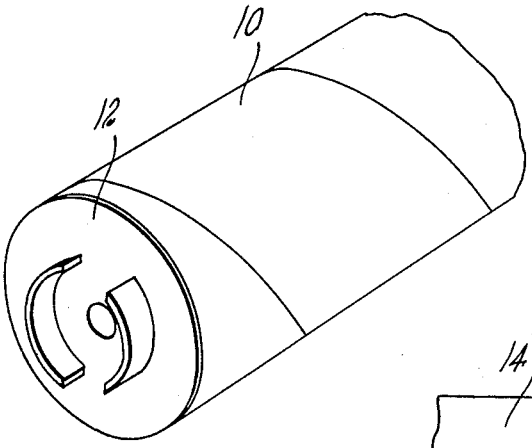


Fig. 1.

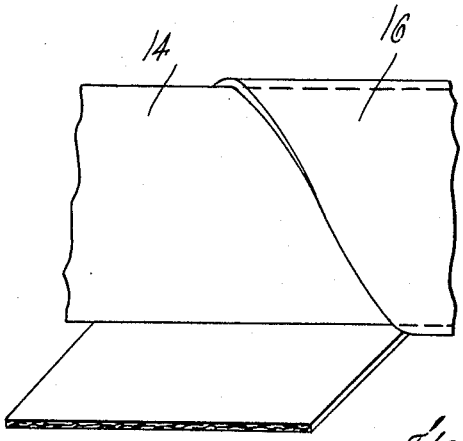


Fig. 2.

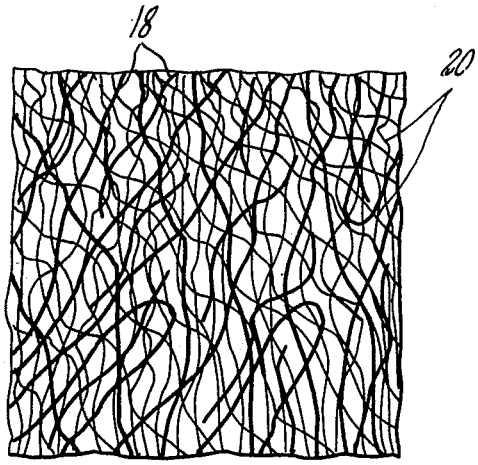


Fig. 3.

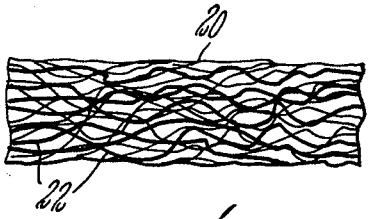


Fig. 4.