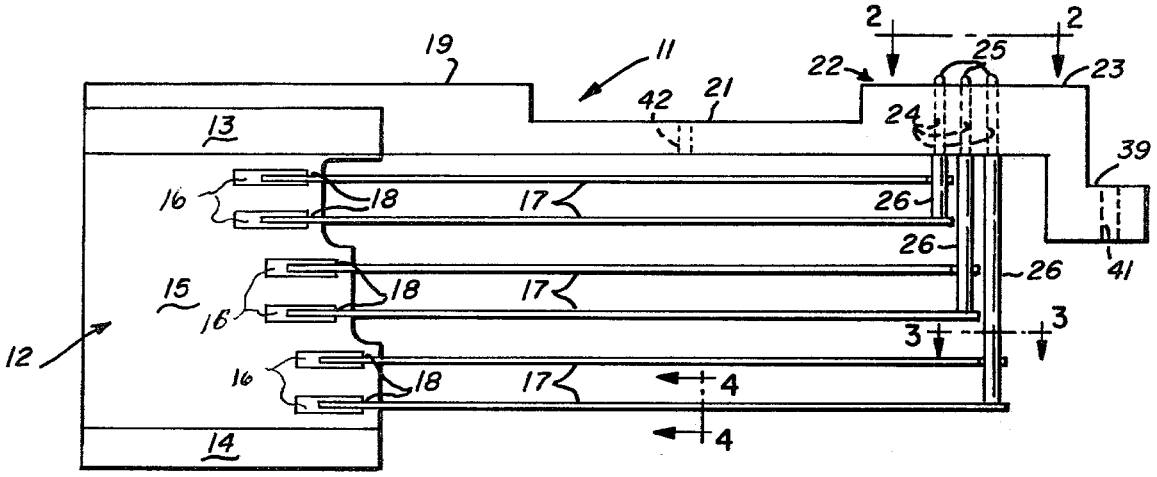

Fig_1

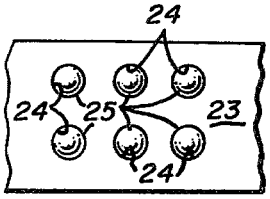

Fig_2

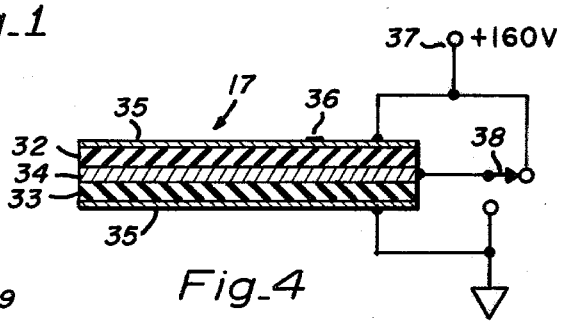

Fig_4

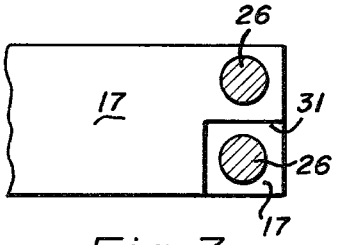

Fig_3

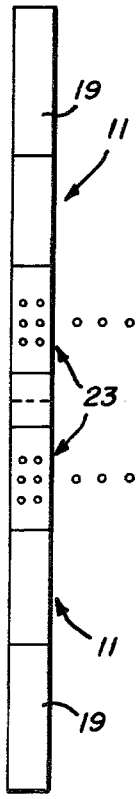

Fig_6

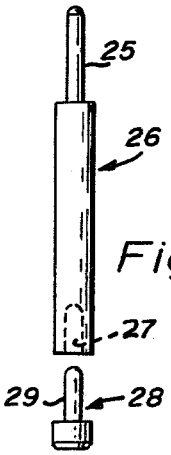

Fig_5