# United States Patent

[11] **3,580,978**


[72] Inventor **William C. Ebeling**
**Binghamton, N.Y.**



[21] Appl. No. **735,109**
[22] Filed **June 6, 1968**
[45] Patented **May 25, 1971**
[73] Assignee **Singer-General Precision, Inc.**
**Binghamton, N.Y.**


[54] **VISUAL DISPLAY METHOD AND APPARATUS**
**46 Claims, 26 Drawing Figs.**


[52] **U.S. Cl.** ..... **35/10.2,** 35/12N, 35/12S, 178/6.8, 353/11, 353/30
[51] **Int. Cl.** ..... **G09b 9/02,** G06g 7/72
[50] **Field of Search** ..... 35/10.2, 10.4, 12 N; 178/6.8



[56] **References Cited**

UNITED STATES PATENTS

| | | | |
|---|---|---|---|
| 2,883,763 | 4/1959 | Schaper | 35/12 |
| 2,999,322 | 9/1961 | Hemstreet | 35/12 |
| 3,076,271 | 2/1963 | Marvin et al. | 35/12 |
| 3,101,645 | 8/1963 | Hemstreet | 35/12X |
| 3,233,508 | 2/1966 | Hemstreet | 35/12X |
| 3,261,912 | 7/1966 | Hemstreet | 35/12X |
| 3,284,923 | 11/1966 | Leslie | 35/8 |
| 3,367,046 | 2/1968 | Neuberger | 35/12 |
| 3,439,105 | 4/1969 | Ebeling et al. | 35/10.2 |
| 3,451,144 | 6/1969 | Chao et al. | 35/10.2 |

FOREIGN PATENTS

| | | | |
|---|---|---|---|
| 751,628 | 7/1956 | Great Britain | 35/12 |
| 896,404 | 5/1962 | Great Britain | 35/12 |
| 1,037,060 | 7/1966 | Great Britain | 35/12 |



*Primary Examiner*—Malcolm A. Morrison
*Assistant Examiner*—Felix D. Gruber
*Attorneys*—Francis L. Masselle, William Grobman and Andrew G. Pullos


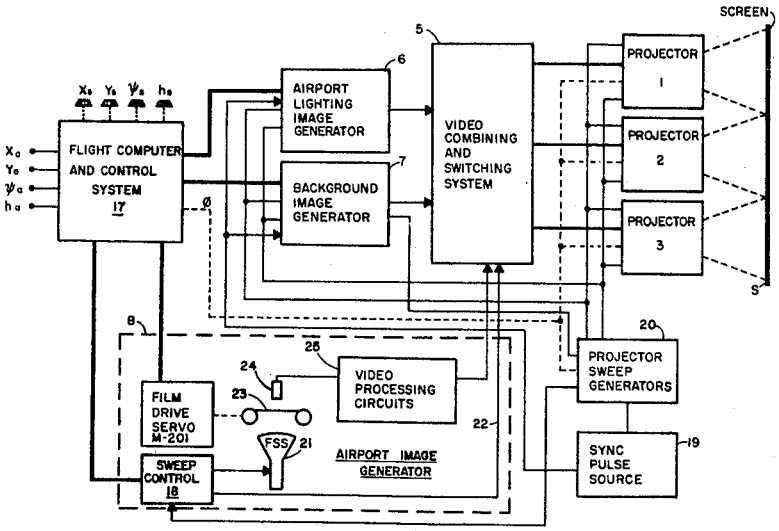
**ABSTRACT:** Apparatus for generating a realistic wide-screen visual display for an aircraft simulator with realistic perspective throughout plural widely different phases of simulated flight by scanning a plurality of different successive types of transparencies with a flying spot scanner to derive video signals to drive television display projectors, including the scanning of a pair of transparencies to provide a background terrain elevation image without topographical features, scanning of a second type of transparency to provide an image of an airport or the like to be inset into the background image and distorting the inset image as simulated range and elevation angle from the airport vary, scanning a third type of transparency to provide a different type of inset image during simulated approach and landing and distorting that inset image in accordance with deviation of the simulated aircraft from a reference glideslope, and scanning a fourth type of transparency to provide a panoramic view of the airport during simulated taxiing and parking maneuvers, with means for automatically controlling the successive scanning modes with signals from a flight computer.