BI-FOCAL CORNEAL CONTACT LENS

Original Filed March 30, 1959 2 Sheets-Sheet 2

Fig. 5

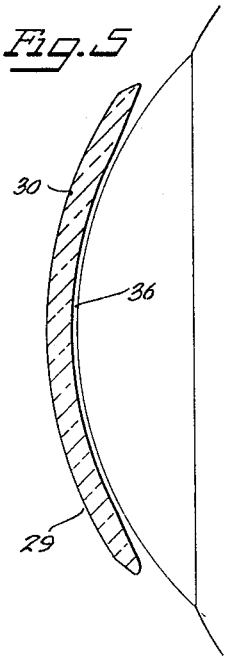

Fig. 6

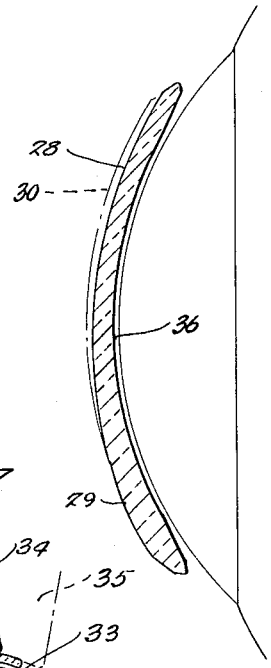

Fig. 7

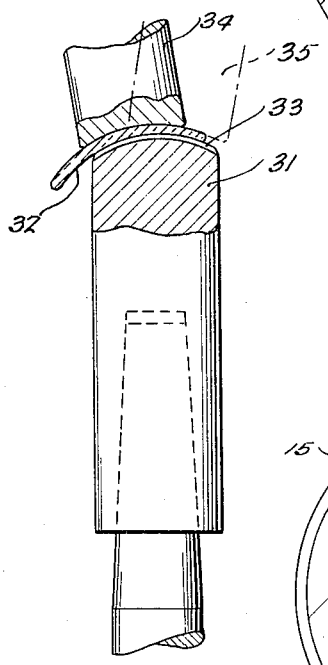

Fig. 8

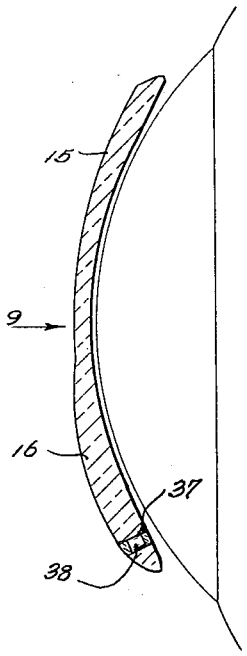

Fig. 9

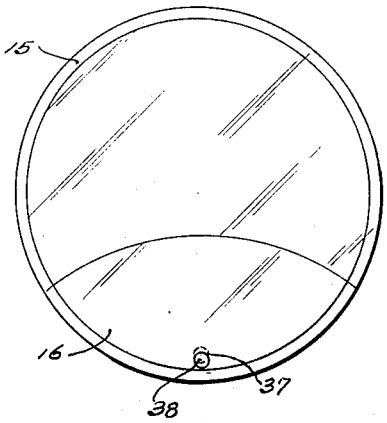

Inventor
WILLIAM E LONG

By Soans, Anderson, Luedeka & Fitch
Atty's