BI-FOCAL CORNEAL CONTACT LENS

Original Filed March 30, 1959 2 Sheets-Sheet 1

Fig. 1

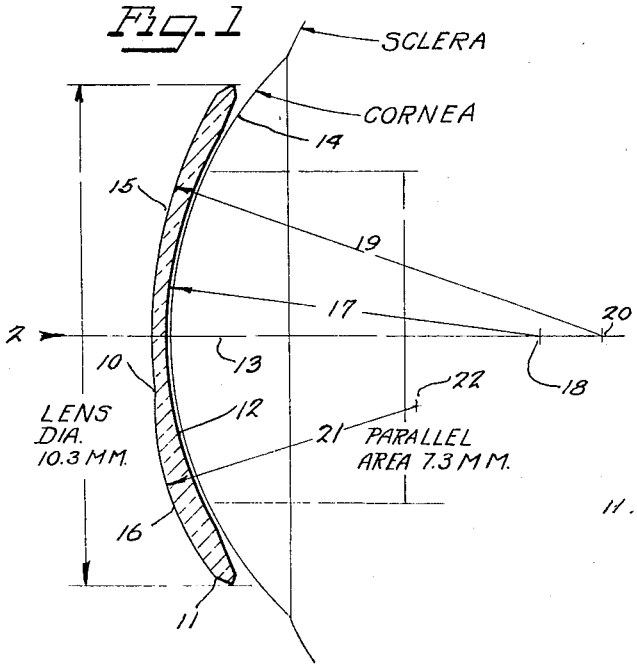

Fig. 2

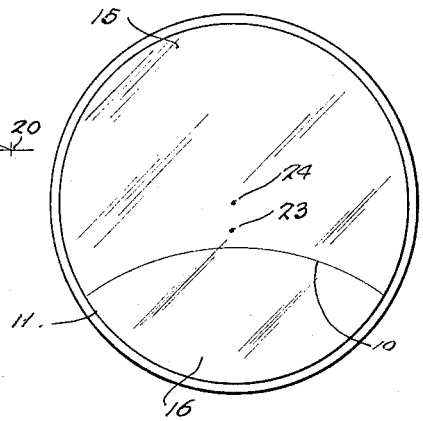

Fig. 3

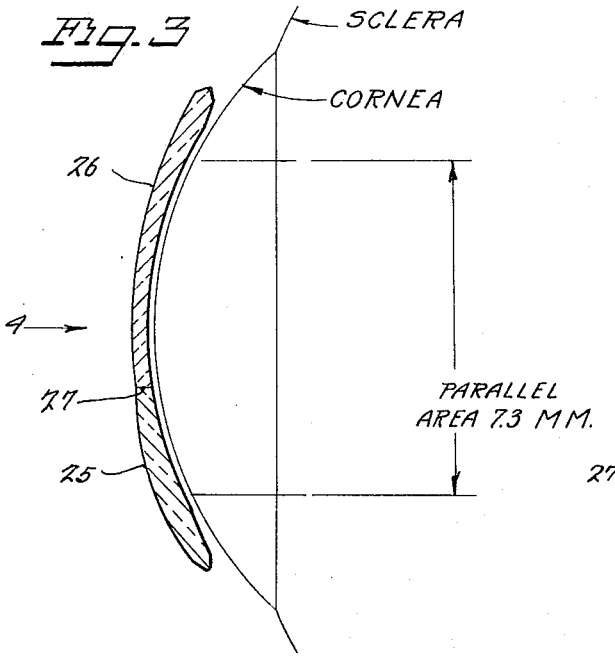

Fig 4

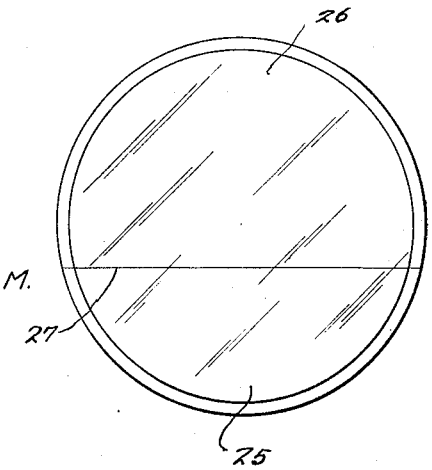

Inventor
WILLIAM E LONG

By Soans, Anderson, Luedeka & Fitch
Atty's