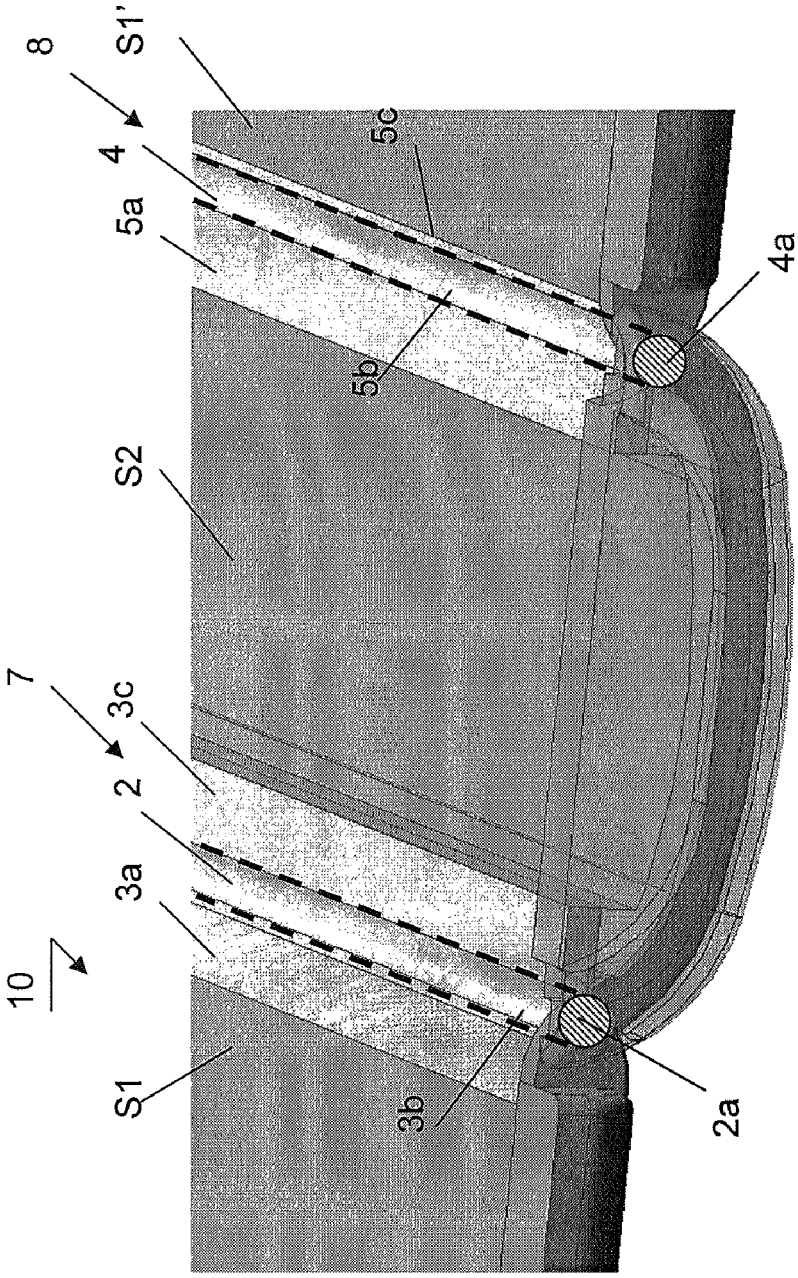

Figure 1