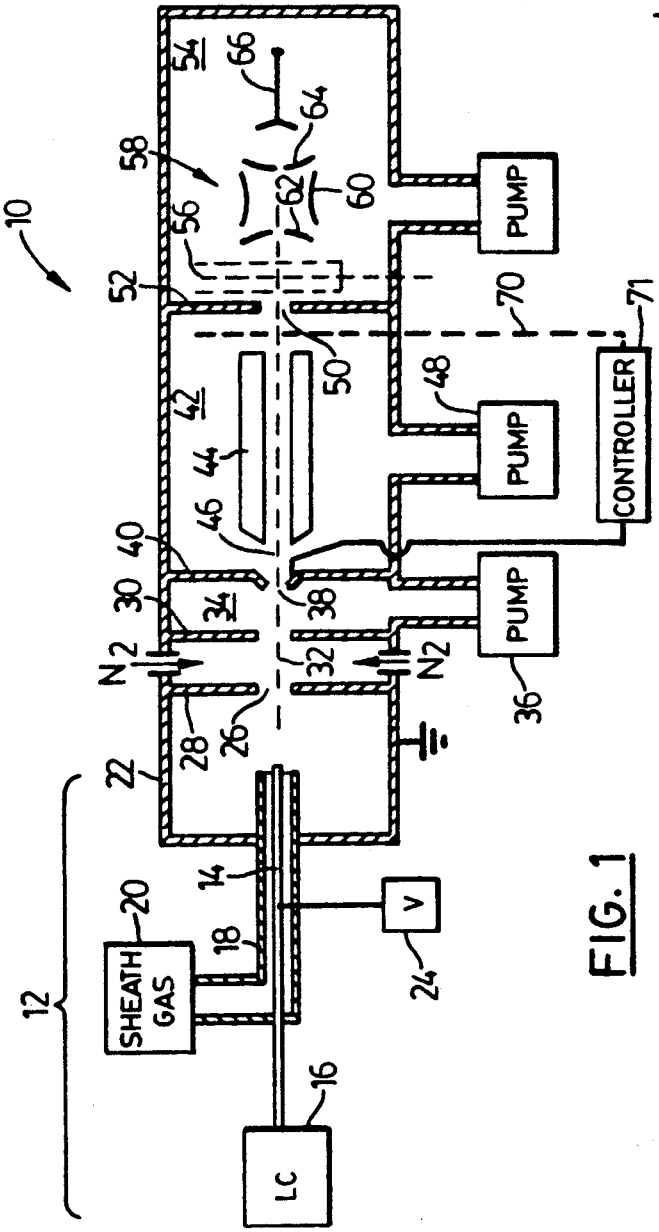
10
12
SHEATH GAS
20
18
14
V
24
LC
16
22
28
26
N2
32
N2
30
34
40
38
46
44
42
50
52
56
58
54
66
64
62
60
PUMP
PUMP
PUMP
CONTROLLER
48
70
71
36

FIG. 1

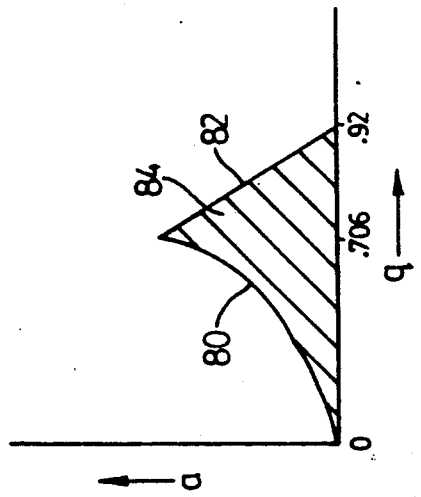
a
0
.706
.92
q
80
82
84

FIG. 2