April 20, 1965 W. COHEN 3,179,278

TELESCOPIC FORM CONTAINERS AND DISPENSERS

Filed July 1, 1963 3 Sheets-Sheet 1

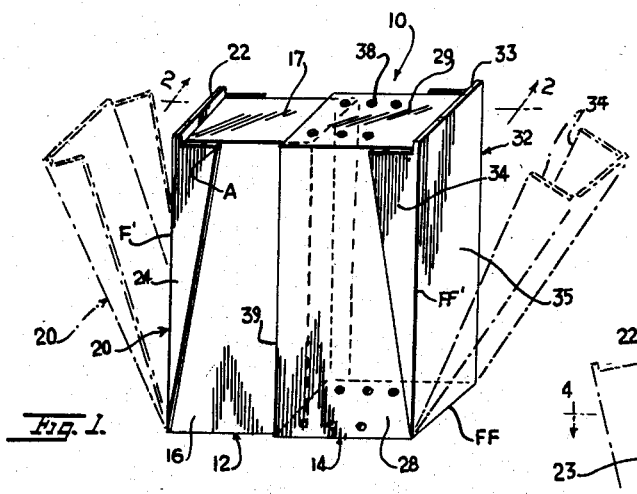

Fig. 1.

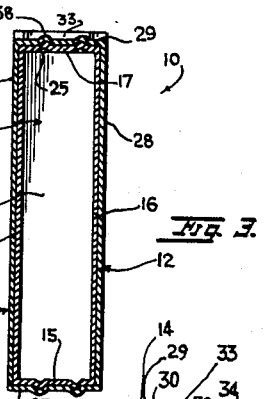

Fig. 3.

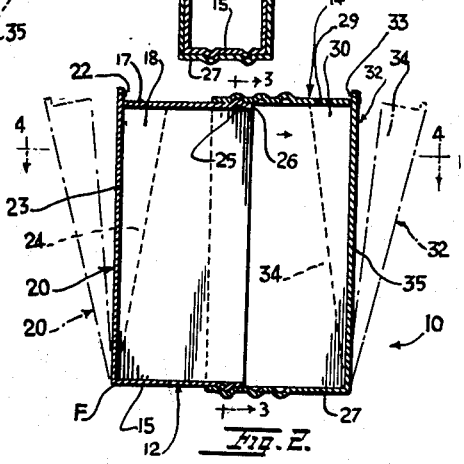

Fig. 2.

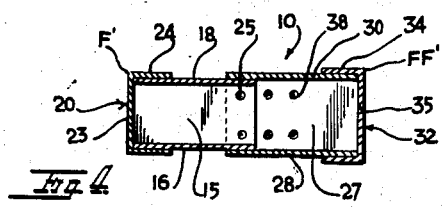

Fig. 4.

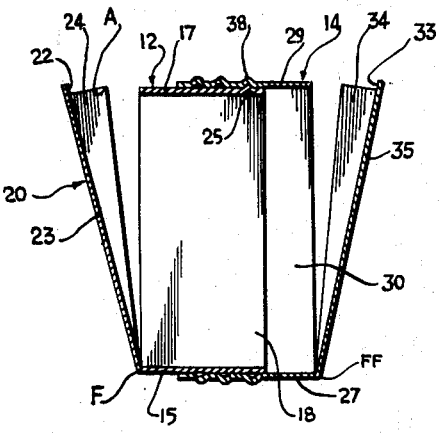

Fig. 5.

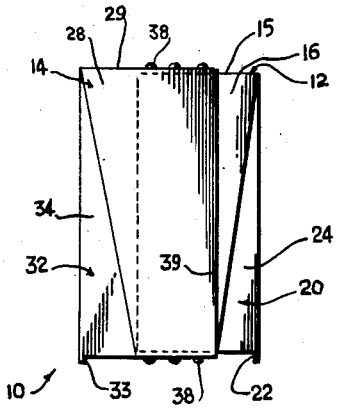

Fig. 6.

INVENTOR.
WILLIAM COHEN
BY Pollock & Saulsbury
ATTORNEYS