US006670078B1

(12) **United States Patent**
Sato et al.

(10) **Patent No.: US 6,670,078 B1**
(45) **Date of Patent: Dec. 30, 2003**

(54) **NON-AQUEOUS ELECTROLYTE CELL WITH A SOLVENT INCLUDING A S-O BOND**

(75) Inventors: **Tomohiro Sato**, Ami-machi (JP); **Shoichiro Mori**, Ami-machi (JP); **Marc Deshamps**, Ami-machi (JP); **Minoru Kotato**, Ami-machi (JP); **Noriko Shima**, Ami-machi (JP); **Hitoshi Suzuki**, Ami-machi (JP)

(73) Assignee: **Mitsubishi Chemical Corporation**, Tokyo (JP)

(*) Notice: Subject to any disclaimer, the term of this patent is extended or adjusted under 35 U.S.C. 154(b) by 0 days.

(21) Appl. No.: **09/508,108**

(22) PCT Filed: **Sep. 17, 1998**

(86) PCT No.: **PCT/JP98/04181**

§ 371 (c)(1),
(2), (4) Date: **Jul. 19, 2000**

(87) PCT Pub. No.: **WO99/16144**

PCT Pub. Date: **Apr. 1, 1999**

(30) **Foreign Application Priority Data**

Sep. 19, 1997 (JP) 9/254802
Oct. 13, 1997 (JP) 9/278626
Apr. 22, 1998 (JP) 10/111794

(51) **Int. Cl.**[7] **H01M 6/16**
(52) **U.S. Cl.** **429/340**
(58) **Field of Search** 429/340; 252/62.1

(56) **References Cited**

U.S. PATENT DOCUMENTS

4,048,403 A * 9/1977 Kronrnberg 429/194
4,104,450 A * 8/1978 Whitney 429/194
4,293,623 A * 10/1981 Klemann 429/194
4,444,855 A * 4/1984 Dey 429/48
4,528,254 A * 7/1985 Wolf 429/197
4,550,064 A * 10/1985 Yen 429/94
4,808,497 A * 2/1989 Blomgren 429/194
4,844,996 A * 7/1989 Peled 429/194
5,114,811 A * 5/1992 Ebel 429/194
5,260,145 A * 11/1993 Armand 429/50
5,626,981 A * 5/1997 Simon 429/105
5,648,011 A * 7/1997 Blonsky 252/62.2
6,033,809 A * 3/2000 Hamamoto 429/340

FOREIGN PATENT DOCUMENTS

JP 62100948 * 5/1987 ..... H01M/10/40
JP 62-108474 5/1987
JP 3-152879 6/1991
JP 403152879 A * 6/1991 ..... H01M/10/40
JP 5-290854 11/1993
JP 5-307974 11/1993
JP 5-307974 A * 11/1993 ..... H01M/10/40
JP 6-231754 8/1994
JP 6-302336 10/1994
JP 7-122295 5/1995
JP 07122295 A * 5/1995 ..... H01M/10/40
JP 8-096851 4/1996
JP 9-050823 * 2/1997
JP 9-120837 5/1997
JP 9-147814 6/1997

* cited by examiner

Primary Examiner—Patrick Ryan
Assistant Examiner—Mark Ruthkosky
(74) *Attorney, Agent, or Firm*—Oblon, Spivak, McClelland, Maier & Neustadt, P.C.

(57) **ABSTRACT**

A nonaqueous electrolytic solution cell having a negative electrode containing lithium as an active material, a positive electrode, a nonaqueous electrolytic solution consisting of solute and organic solvent, a separator, and an outer can, wherein the organic solvent contains a compound having an S—O bond, and a current collector for the positive electrode and an electrolytic solution-contacting portion on the positive electrode side of the outer can are made of valve metal or alloy thereof is disclosed. The nonaqueous electrolytic solution cell of the present invention is excellent in low-temperature characteristics and long-term stability, and also in cycle characteristics for use as a secondary battery.
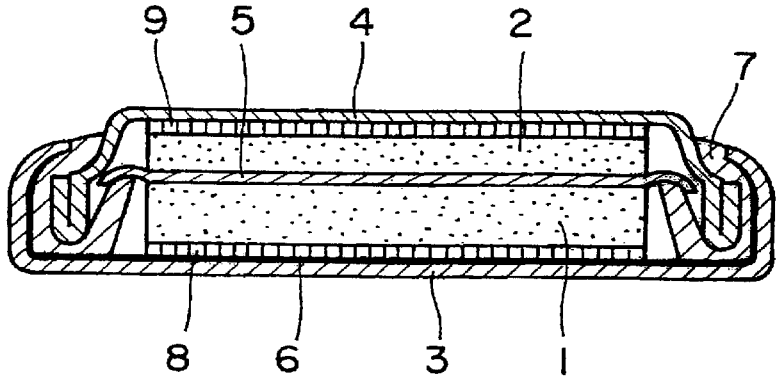
27 Claims, 6 Drawing Sheets