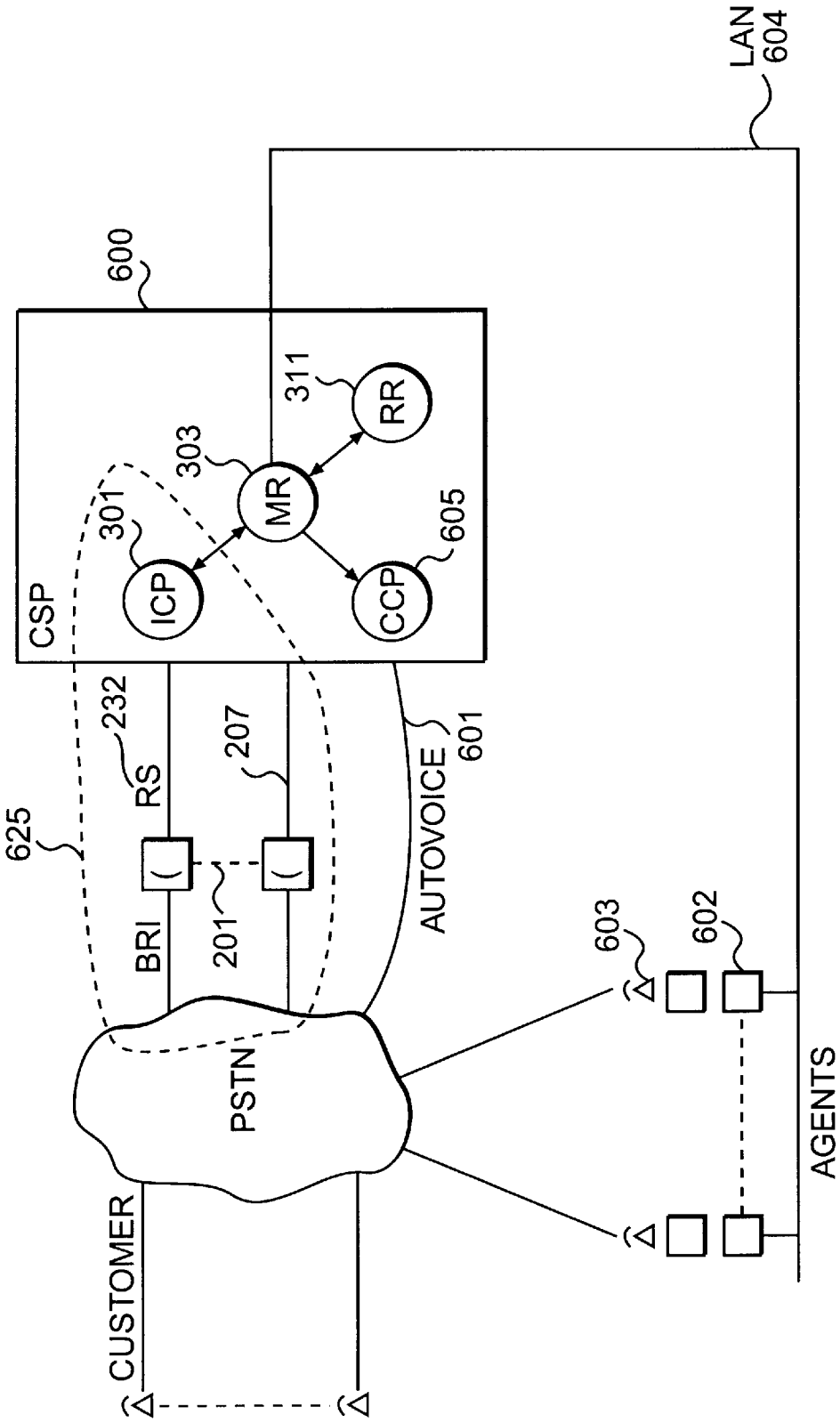
LAN
604
600
CSP
ICP
301
MR
303
RR
311
CCP
605
625
232
RS
207
BRI
201
AUTOVOICE
601
PSTN
CUSTOMER
603
602
AGENTS

FIG. 6