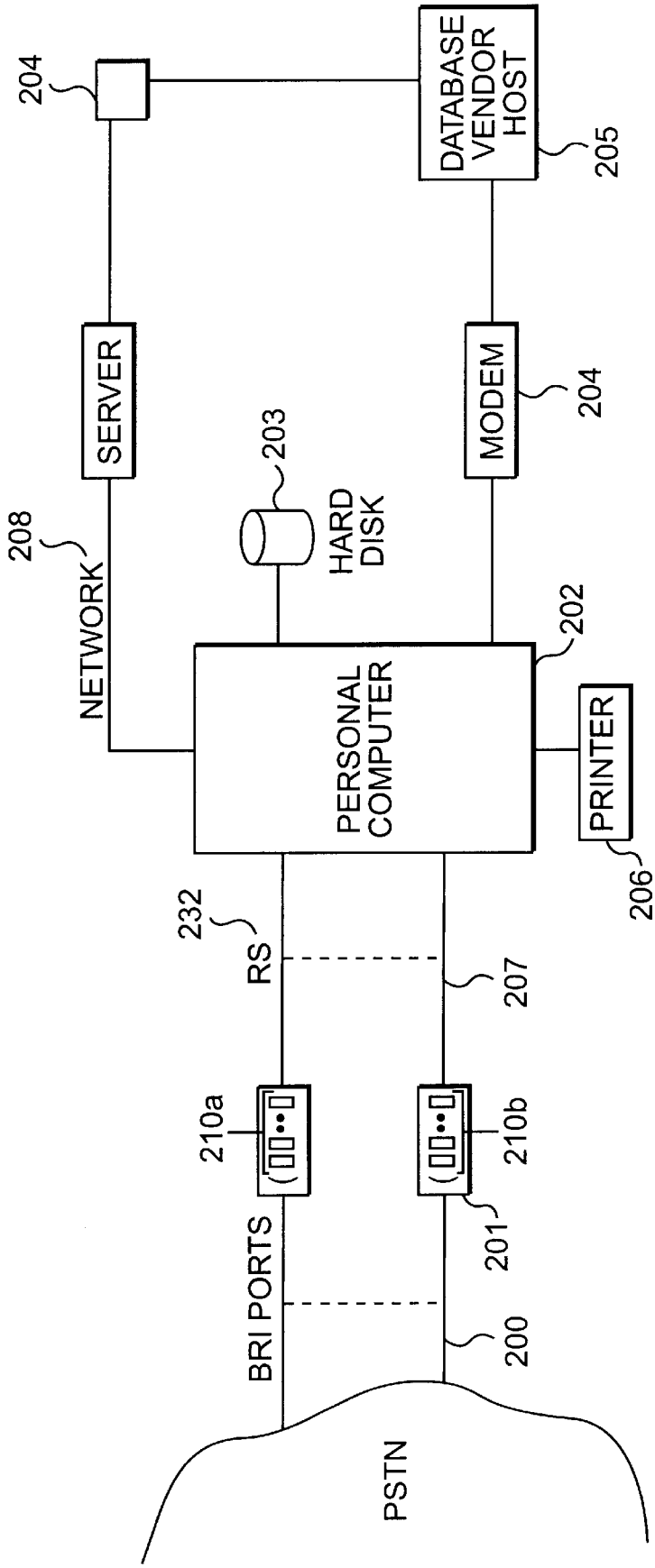
204
DATABASE VENDOR HOST
205
SERVER
MODEM
204
203
HARD DISK
208
NETWORK
202
PERSONAL COMPUTER
PRINTER
206
232
RS
207
210a
210b
BRI PORTS
201
200
PSTN

FIG. 2