Aug. 14, 1956 J. K. ROSE 2,759,178

CABINET

Original Filed Feb. 11, 1947 3 Sheets-Sheet 1

Fig. 1

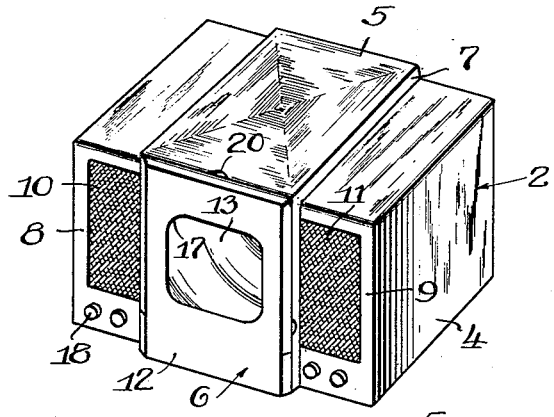

Fig. 2

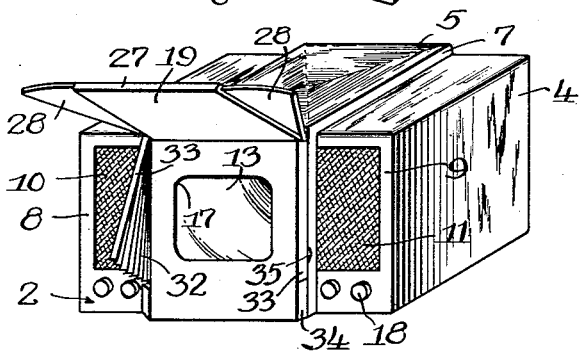

Fig. 3

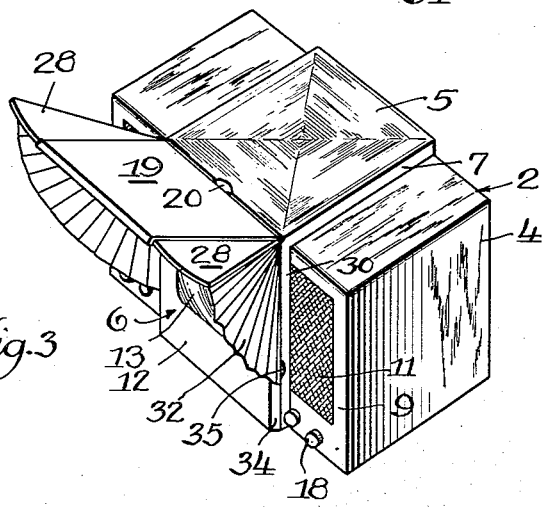

Inventor,
Joseph K. Rose,
By: Benjamin Schlosser
Atty.