March 15, 1966 H. E. JONES 3,241,078

DUAL OUTPUT SYNCHRONOUS DETECTOR UTILIZING TRANSISTORIZED DIFFERENTIAL AMPLIFIERS

Filed June 18, 1963

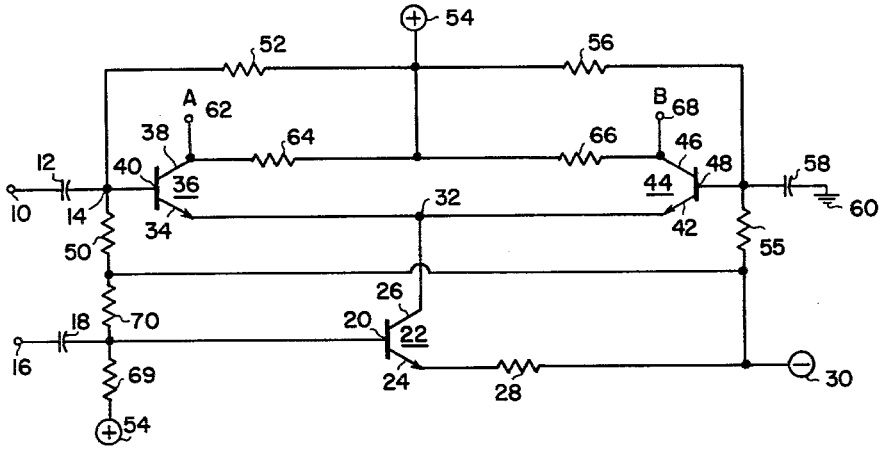

FIG. 1

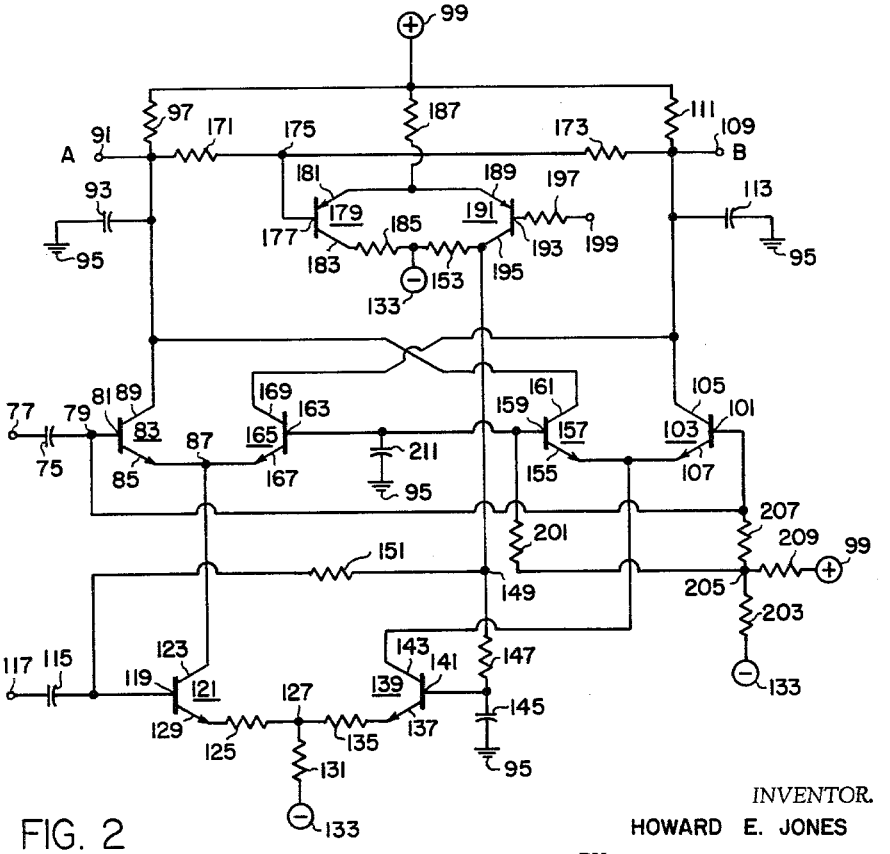

FIG. 2

INVENTOR.
HOWARD E. JONES

BY Roger W. Jensen

ATTORNEY