US009340178B1

(12) **United States Patent**
Khaykin et al.

(10) **Patent No.: US 9,340,178 B1**
(45) **Date of Patent: May 17, 2016**

(54) **ADHESIVE VEHICLE FRONT END FOR MITIGATION OF SECONDARY PEDESTRIAN IMPACT**

(71) Applicant: **Google Inc.**, Mountain View, CA (US)

(72) Inventors: **Alex Khaykin**, San Francisco, CA (US); **Daniel Lynn Larner**, San Jose, CA (US)

(73) Assignee: **Google Inc.**, Mountain View, CA (US)

(*) Notice: Subject to any disclaimer, the term of this patent is extended or adjusted under 35 U.S.C. 154(b) by 0 days.

(21) Appl. No.: **14/539,533**

(22) Filed: **Nov. 12, 2014**

Related U.S. Application Data

(60) Provisional application No. 61/911,853, filed on Dec. 4, 2013.

(51) **Int. Cl.**
B60R 21/34 (2011.01)
B60R 21/00 (2006.01)

(52) **U.S. Cl.**
CPC ***B60R 21/34*** (2013.01); *B60R 2021/0004* (2013.01); *B60R 2021/346* (2013.01)

(58) **Field of Classification Search**
CPC .. B60R 21/00; B60R 21/34; B60R 2021/003; B60R 2021/0037; B60R 2021/343; B60R 2021/346
See application file for complete search history.

(56) **References Cited**

U.S. PATENT DOCUMENTS

6,447,049	B1 *	9/2002	Tohda et al.	296/180.1
6,746,074	B1 *	6/2004	Kempf et al.	296/187.04
7,757,804	B1 *	7/2010	Li	180/274
8,191,666	B2	6/2012	Suzuki et al.	
2004/0130167	A1 *	7/2004	Mori et al.	293/102
2006/0186702	A1 *	8/2006	Kisanuki et al.	296/187.04
2010/0108424	A1 *	5/2010	Suzuki et al.	180/232

FOREIGN PATENT DOCUMENTS

DE	2804400		8/1979
DE	10059206		7/2002
EP	1476334		3/2007
JP	08183423	A *	7/1996
JP	2009166548		7/2009

OTHER PUBLICATIONS

Machine Translation of JP08-183423. Retrieved Jun. 28, 2015.*

* cited by examiner

Primary Examiner — Barry Gooden, Jr.
(74) *Attorney, Agent, or Firm* — McDonnell Boehnen Hulbert & Berghoff LLP.

(57) **ABSTRACT**

A system for protecting a colliding object from a secondary impact, after an initial impact with a vehicle, including a vehicle having a front end, an adhesive layer positioned on the front end of the vehicle, a coating positioned over the adhesive layer, wherein, upon the initial impact between the colliding object and the vehicle, the coating is broken exposing the adhesive layer to adhere the colliding object to the adhesive layer during the initial impact.
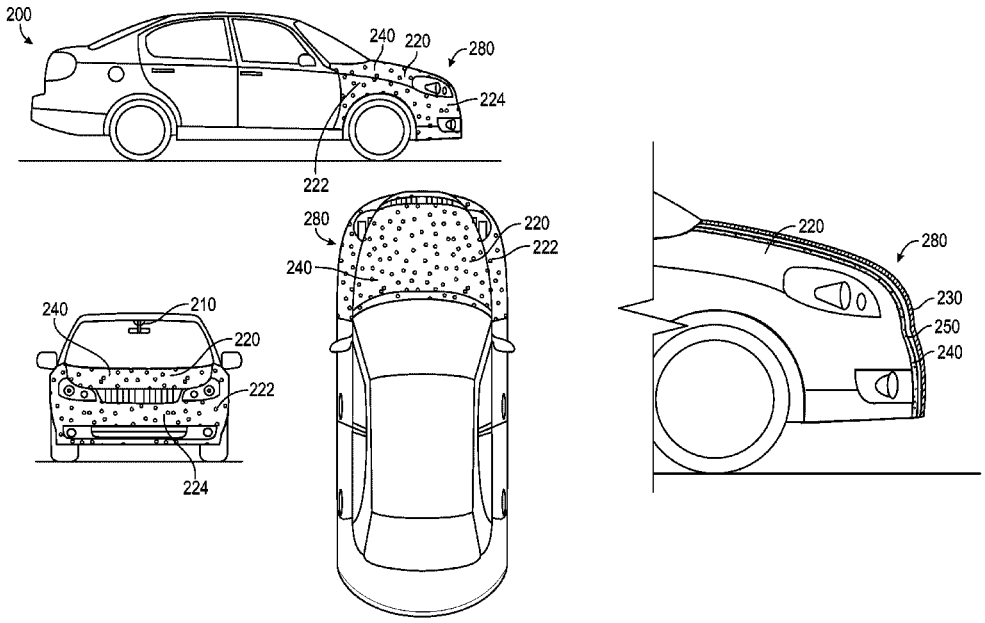
19 Claims, 7 Drawing Sheets