FIG. 1

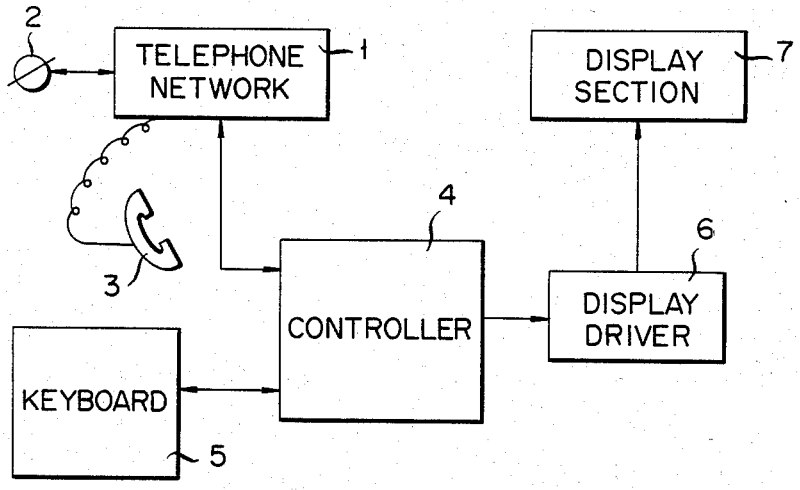
2
TELEPHONE NETWORK
1
DISPLAY SECTION
7
4
6
3
CONTROLLER
DISPLAY DRIVER
KEYBOARD
5

FIG. 2

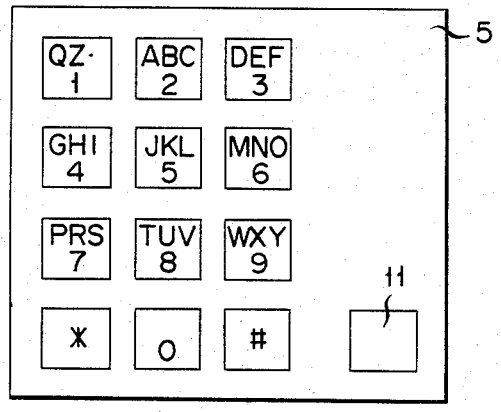
5
QZ· 1
ABC 2
DEF 3
GHI 4
JKL 5
MNO 6
PRS 7
TUV 8
WXY 9
11
* 0 #