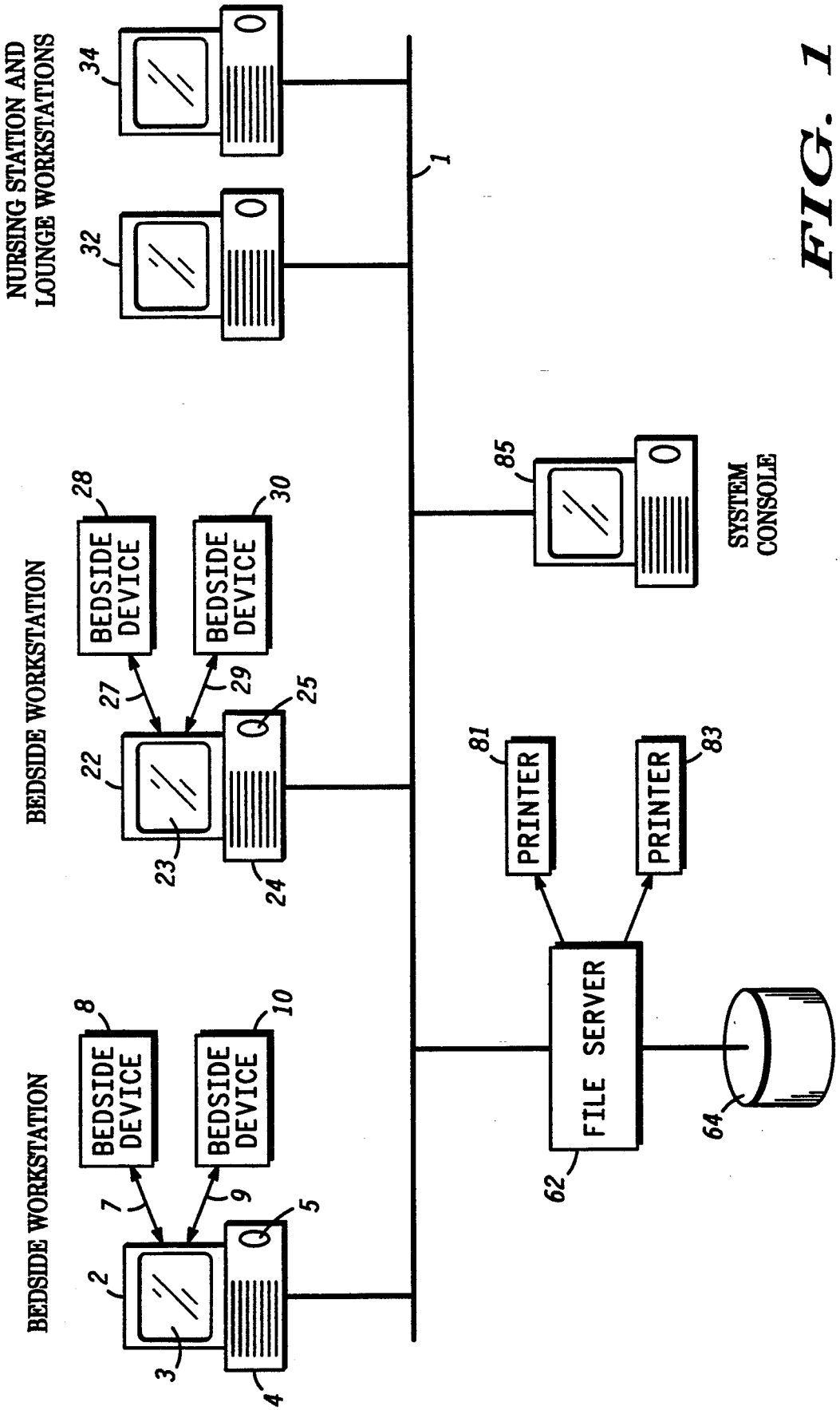
NURSING STATION AND LOUNGE WORKSTATIONS
34
32
1
BEDSIDE WORKSTATION
BEDSIDE DEVICE
BEDSIDE DEVICE
28
30
27
29
25
22
23
24
BEDSIDE WORKSTATION
BEDSIDE DEVICE
BEDSIDE DEVICE
8
10
7
9
5
2
3
4
85
SYSTEM CONSOLE
PRINTER
PRINTER
81
83
FILE SERVER
62
64

FIG. 1