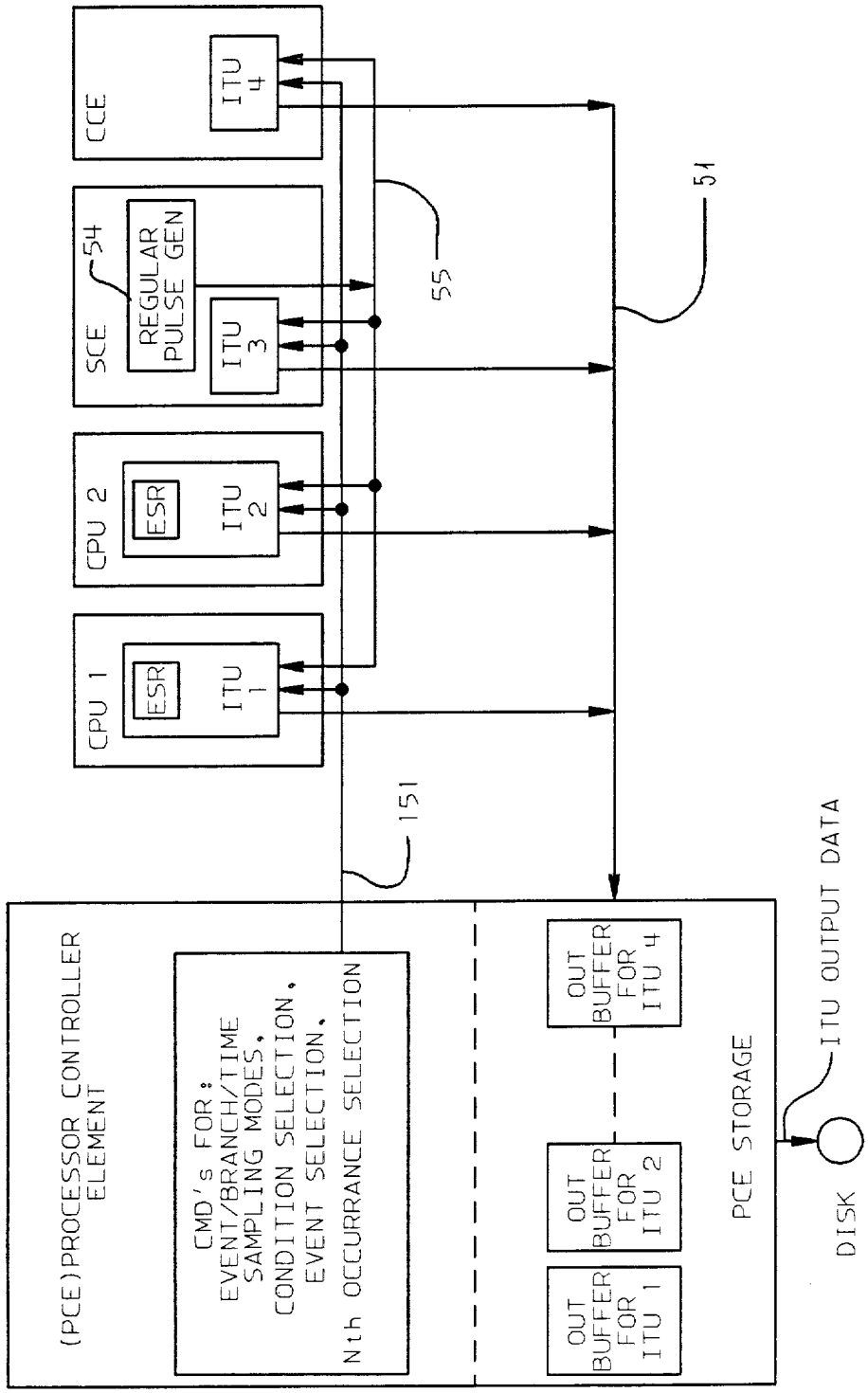
CPU 1
ESR
ITU 1
CPU 2
ESR
ITU 2
SCE
54
REGULAR PULSE GEN
ITU 3
CCE
ITU 4
55
51
151
(PCE)PROCESSOR CONTROLLER ELEMENT
CMD's FOR:
EVENT/BRANCH/TIME SAMPLING MODES,
CONDITION SELECTION,
EVENT SELECTION,
Nth OCCURRANCE SELECTION
OUT BUFFER FOR ITU 1
OUT BUFFER FOR ITU 2
OUT BUFFER FOR ITU 4
PCE STORAGE
ITU OUTPUT DATA
DISK

FIG. 1