Nov. 2, 1965 C. L. STEC 3,215,078

CONTROLLED VOLUME PIEZOELECTRIC PUMPS

Filed Aug. 31, 1964

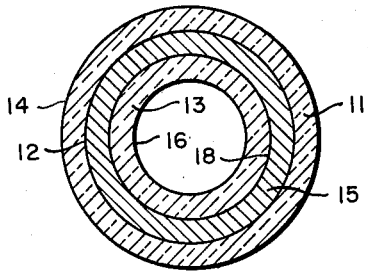


FIG. 1.

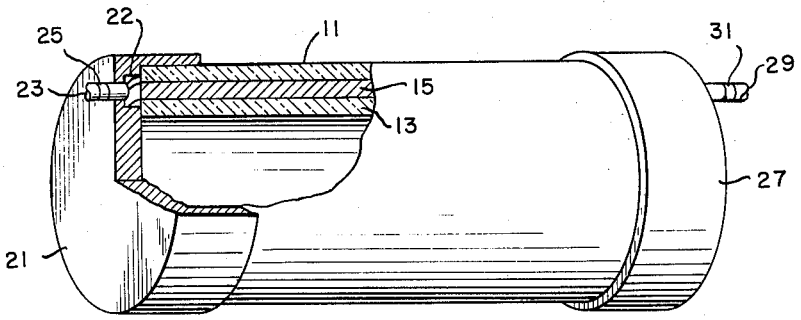


FIG. 2.

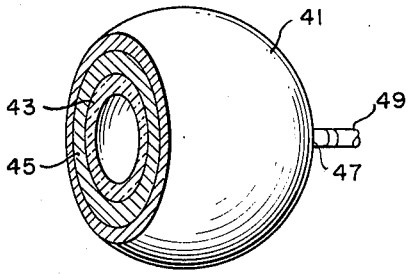


FIG. 3.

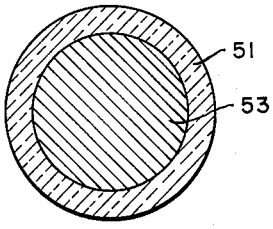


FIG. 4.

INVENTOR.
CHARLES L. STEC
BY D. W. Hodges
Marvin Reich
ATTYS.