PAINT APPLICATORS AND KITS

Filed May 23, 1963 2 Sheets-Sheet 2

FIG. 10

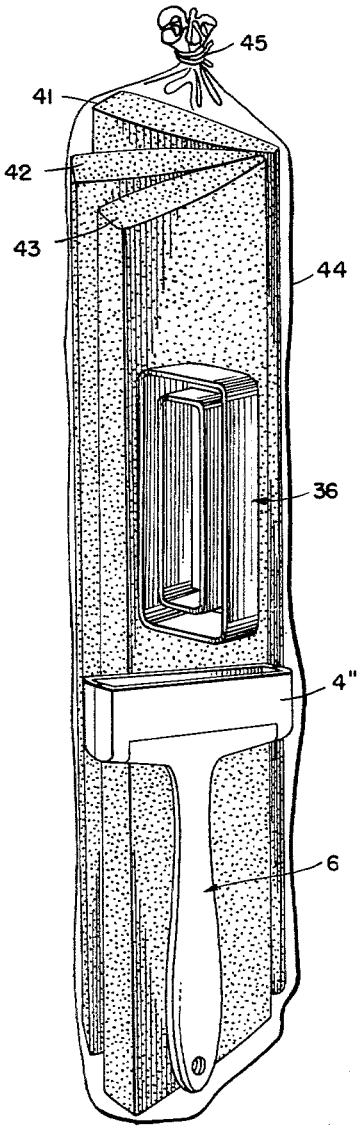

FIG. 11

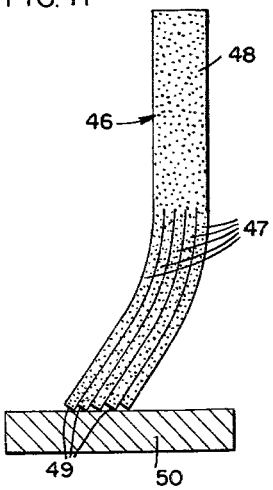

FIG. 12

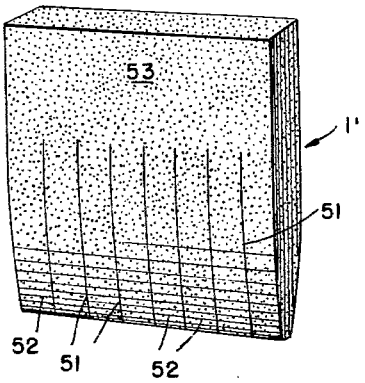

INVENTOR:
ROBERT V. MATHISON
BY Marvell, Johnston, Cook & Root
ATT'YS