US009410878B2

(12) **United States Patent**
Vize et al.

(10) **Patent No.: US 9,410,878 B2**
(45) **Date of Patent: Aug. 9, 2016**

(54) **PORTABLE ULTRAFINE PARTICLE SIZER (PUPS) APPARATUS**

(71) Applicants: **Andrew Vize**, Essex Junction, VT (US); **Matthew Casari**, Waterbury, VT (US); **Jeff Frolik**, Essex Junction, VT (US); **Britt Holmen**, Burlington, VT (US)

(72) Inventors: **Andrew Vize**, Essex Junction, VT (US); **Matthew Casari**, Waterbury, VT (US); **Jeff Frolik**, Essex Junction, VT (US); **Britt Holmen**, Burlington, VT (US)

(73) Assignee: **The University of Vermont and State Agricultural College**, Burlington, VT (US)

(*) Notice: Subject to any disclaimer, the term of this patent is extended or adjusted under 35 U.S.C. 154(b) by 101 days.

(21) Appl. No.: **14/256,976**

(22) Filed: **Apr. 20, 2014**

(65) **Prior Publication Data**

US 2015/0068282 A1 Mar. 12, 2015

Related U.S. Application Data

(62) Division of application No. 12/908,280, filed on Oct. 20, 2010, now Pat. No. 8,739,602.

(51) **Int. Cl.**
G01N 15/02 (2006.01)

(52) **U.S. Cl.**
CPC ***G01N 15/0255*** (2013.01); ***G01N 15/0266*** (2013.01)

(58) **Field of Classification Search**
CPC G01N 15/02; G01N 15/0255; G01N 15/0266
USPC 73/28.01, 28.02, 28.04
See application file for complete search history.

(56) **References Cited**

U.S. PATENT DOCUMENTS

4,339,782 A * 7/1982 Yu H01T 23/00 361/229
6,544,484 B1 * 4/2003 Kaufman G01N 15/0266 422/186
6,639,671 B1 * 10/2003 Liu G01N 15/0205 250/574
7,031,133 B2 * 4/2006 Riebel H01T 23/00 361/212
7,471,076 B2 * 12/2008 Ahn G01N 15/0266 324/71.4
7,518,108 B2 * 4/2009 Frey H01J 49/0045 250/281
8,461,523 B2 * 6/2013 Vidal-De-Miguel H01J 49/0422 250/281
8,666,679 B2 * 3/2014 Barrett G01N 15/0266 702/24
9,177,774 B2 * 11/2015 Brunelli G01N 27/624
2002/0047713 A1 * 4/2002 Noll H05F 3/06 324/464
2005/0021724 A1 * 1/2005 Kung H04L 12/24 709/223
2006/0093737 A1 * 5/2006 Dick H01L 21/67028 427/180
2008/0302666 A1 * 12/2008 Benner G01N 15/0266 204/645
2009/0134322 A1 * 5/2009 Thomson H01J 49/004 250/282
2009/0173670 A1 * 7/2009 Okuda G01N 15/0266 209/127.1
2010/0001184 A1 * 1/2010 Chen G01N 15/0266 250/307
2010/0244262 A1 * 9/2010 Awano B82Y 10/00 257/758

* cited by examiner

Primary Examiner — Daniel S Larkin
(74) *Attorney, Agent, or Firm* — K. P. Correll & Associates, LLC

(57) **ABSTRACT**

The Portable Ultrafine Particle Sizer (PUPS) invention is provided. The PUPS is an instrument which can measure particle number concentration for particle sizes under 200 nanometers in-situ. The PUPS is a compact design for quick mounting on vehicles. Size discrimination is accomplished using a compact reverse Differential Mobility Analyzer (rDMA). Particle charging is accomplished using corona ionization. Concentration measurements are completed using a unique flexible printed circuit board electrode which can be removed for cleaning, disposal or chemical analysis of collected particles at the end of its in situ measurement life.
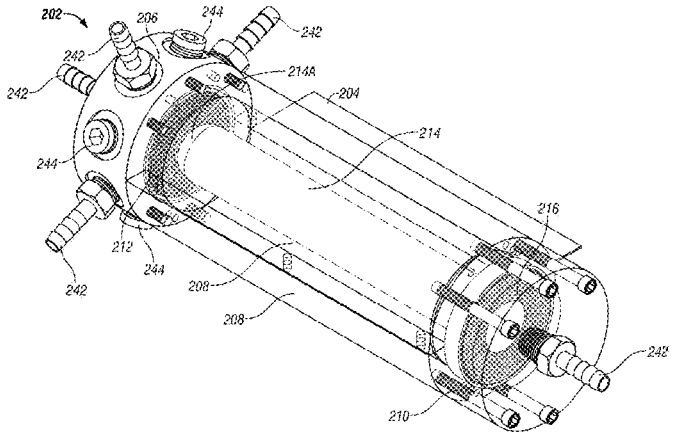
8 Claims, 15 Drawing Sheets