US009510678B2

(12) **United States Patent**
Aleisa

(10) **Patent No.: US 9,510,678 B2**
(45) **Date of Patent: Dec. 6, 2016**

(54) **MODULAR SHELVING**

(71) Applicant: **Hamad F. H. S. Aleisa**, London (GB)

(72) Inventor: **Hamad F. H. S. Aleisa**, London (GB)

(*) Notice: Subject to any disclaimer, the term of this patent is extended or adjusted under 35 U.S.C. 154(b) by 0 days.

(21) Appl. No.: **14/490,300**

(22) Filed: **Sep. 18, 2014**

(65) **Prior Publication Data**

US 2016/0081472 A1 Mar. 24, 2016

(51) **Int. Cl.**
A47B 87/02 (2006.01)
A47B 47/00 (2006.01)

(52) **U.S. Cl.**
CPC ***A47B 87/0292*** (2013.01); ***A47B 47/0091*** (2013.01)

(58) **Field of Classification Search**
CPC ... A47B 81/06; A47B 87/008; A47B 87/0292; A47B 47/0091; E04B 2/14; E04B 2/16; E04B 2/18; E04B 2002/0206; E04B 2002/0232; E04B 2002/0234
USPC 211/188; 312/111
See application file for complete search history.

(56) **References Cited**

U.S. PATENT DOCUMENTS

2,351,768	A *	6/1944	Kaping	52/443
3,552,817	A *	1/1971	Marcolongo	312/107
4,192,562	A	3/1980	Bishoff et al.	
4,253,830	A *	3/1981	Kazen et al.	433/77
4,557,094	A *	12/1985	Beliveau	52/405.4
5,046,789	A *	9/1991	Lee	312/108
5,775,046	A *	7/1998	Fanger et al.	52/590.1
6,003,924	A *	12/1999	Nicol	B60R 11/06 296/37.6
7,100,999	B2 *	9/2006	Stravitz	312/111
2002/0070641	A1 *	6/2002	Ragan	312/111
2004/0163352	A1 *	8/2004	Ryan	52/578
2007/0204548	A1 *	9/2007	Gagne	52/604
2013/0208420	A1	8/2013	Franklin	
2014/0123583	A1 *	5/2014	Arriola Serrano	52/405.1

FOREIGN PATENT DOCUMENTS

DE	202004007209	U1	8/2004
JP	S 557744	A	1/1980
KR	100782634	B1	12/2007

OTHER PUBLICATIONS

Kazam!, "Brickbox—shelves, modular libraries," http://www.brickbox.es/en, accessed on Mar. 25, 2016.
Caporaso Design, "More—modular furniture—Caporaso Design," http://www.caporasodesign.it/eng/More.html, last accessed Mar. 25, 2015.
International Search Report and Written Opinion for PCT/US2015/050126, dated Feb. 14, 2016.
Studio Lorier, "Parallel Shelving," http://www.sanderlorier.com/studio/portfolio/parallel-shelving/, last accessed Mar. 31, 2016.

* cited by examiner

Primary Examiner — Korie H Chan
(74) *Attorney, Agent, or Firm* — Foley Hoag LLP; Rajesh Vallabh

(57) **ABSTRACT**

Devices and methods for modular shelving are disclosed.
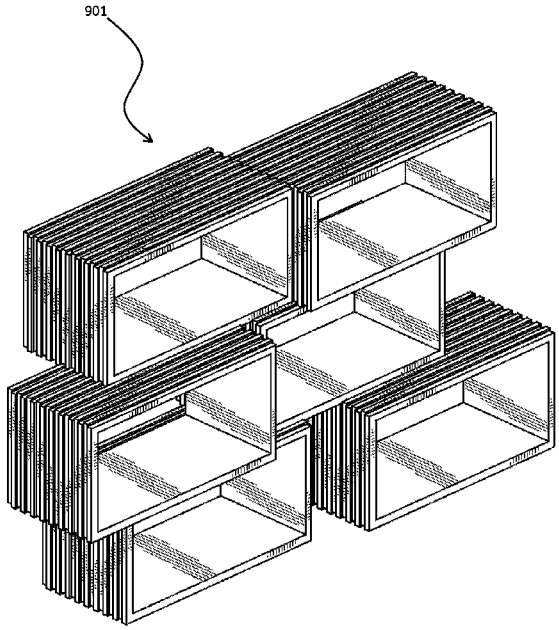
22 Claims, 17 Drawing Sheets