US009410678B2

(12) **United States Patent**
Inoko

(10) **Patent No.: US 9,410,678 B2**
(45) **Date of Patent: Aug. 9, 2016**

(54) **ILLUMINATION APPARATUS LIGHT SOURCE APPARATUS USING ILLUMINATION APPARATUS AND IMAGE DISPLAY APPARATUS**

(71) Applicant: **CANON KABUSHIKI KAISHA**, Tokyo (JP)

(72) Inventor: **Kazuhiro Inoko**, Utsunomiya (JP)

(73) Assignee: **Canon Kabushiki Kaisha**, Tokyo (JP)

(*) Notice: Subject to any disclaimer, the term of this patent is extended or adjusted under 35 U.S.C. 154(b) by 0 days.

(21) Appl. No.: **14/958,782**

(22) Filed: **Dec. 3, 2015**

(65) **Prior Publication Data**

US 2016/0084478 A1 Mar. 24, 2016

Related U.S. Application Data

(63) Continuation of application No. 14/611,028, filed on Jan. 30, 2015, now Pat. No. 9,228,720.

(30) **Foreign Application Priority Data**

Feb. 3, 2014 (JP) 2014-018956

(51) **Int. Cl.**

G02B 13/04	(2006.01)
F21V 13/14	(2006.01)
F21K 99/00	(2016.01)
G03B 21/00	(2006.01)
H04N 9/31	(2006.01)
F21V 13/08	(2006.01)
F21V 13/12	(2006.01)
G03B 21/20	(2006.01)
F21Y 101/02	(2006.01)

(52) **U.S. Cl.**

CPC . ***F21V 13/14*** (2013.01); ***F21K 9/56*** (2013.01); ***F21V 13/08*** (2013.01); ***F21V 13/12*** (2013.01); ***G03B 21/00*** (2013.01); ***G03B 21/204*** (2013.01); ***H04N 9/3158*** (2013.01); *F21Y 2101/025* (2013.01)

(58) **Field of Classification Search**

CPC C12Q 1/6886; C12Q 2600/158; C12Q 2600/156

See application file for complete search history.

(56) **References Cited**

U.S. PATENT DOCUMENTS

8,342,697	B2 *	1/2013	Iwanaga	G03B 21/145 348/743
2011/0032487	A1 *	2/2011	Inoko	G02B 27/283 353/20
2014/0192419	A1 *	7/2014	Inoko	G02B 15/177 359/649

* cited by examiner

Primary Examiner — Tracie Y Green

(74) *Attorney, Agent, or Firm* — Canon USA Inc. IP Division

(57) **ABSTRACT**

An illumination apparatus includes a wavelength conversion element to convert light emitted from a light source into converted light and to emit the converted light and unconverted light, a first optical element including a first region guiding the light emitted from the light source to the wavelength conversion element and a second region preventing the unconverted light from traveling to the light source, and a second optical element to guide the converted light in a direction different from a direction of the light source while guiding the light emitted from the light source to the wavelength conversion element. The second optical element is disposed in an optical path between the first optical element and the wavelength conversion element. The light emitted from the light source is incident on the first region, and the unconverted light is incident on both the first region and second region of the first optical element.
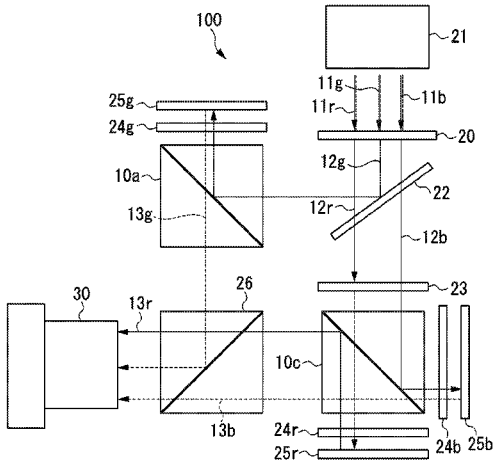
11 Claims, 8 Drawing Sheets