METHOD FOR DETERMINING CRYSTALLOGRAPHIC ORIENTATION

Filed May 28, 1968 2 Sheets-Sheet 2

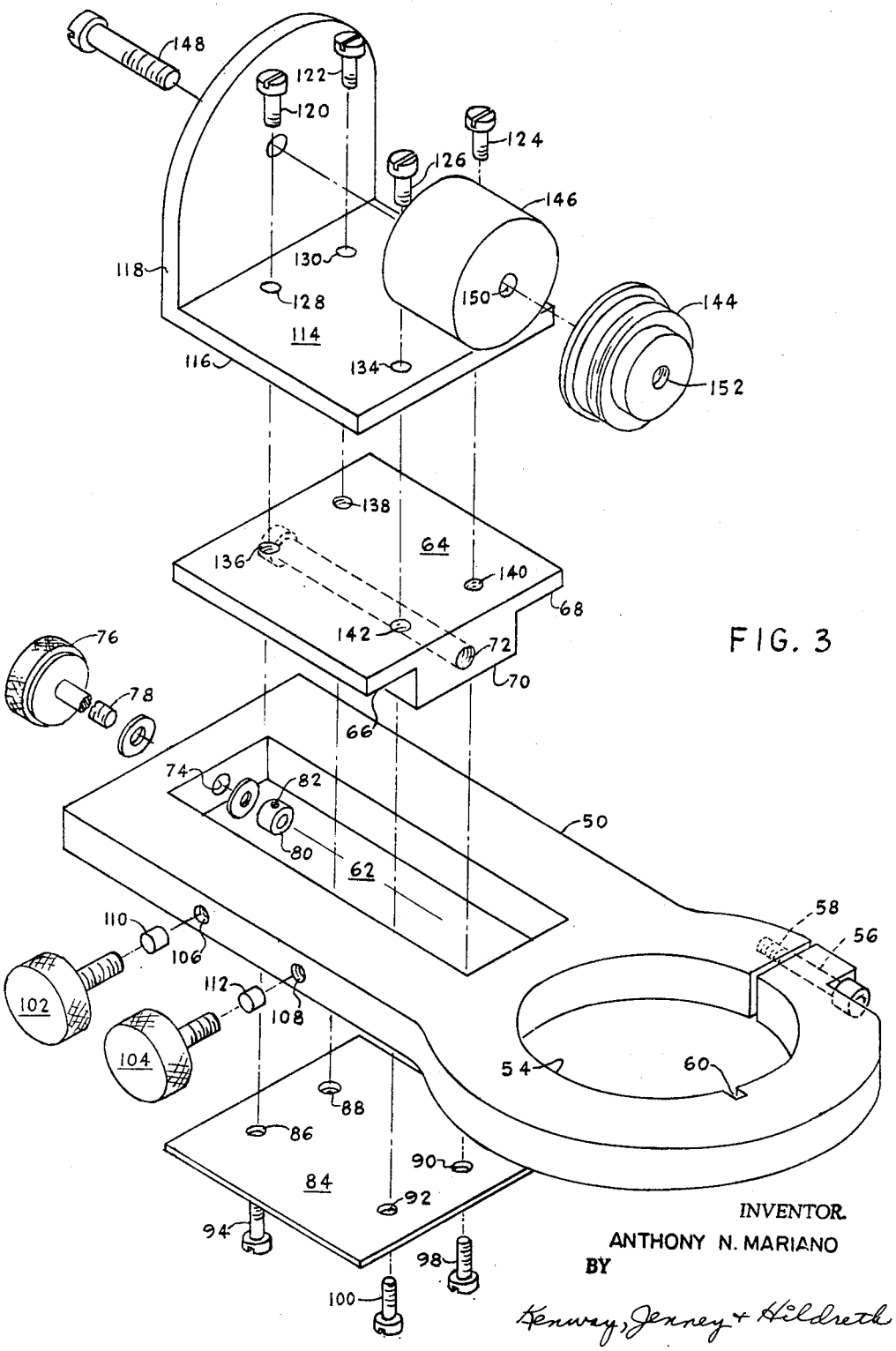

FIG. 3

INVENTOR.
ANTHONY N. MARIANO
BY
Kenway, Jenney & Hildreth