March 31, 1970 A. N. MARIANO 3,504,178

METHOD FOR DETERMINING CRYSTALLOGRAPHIC ORIENTATION

Filed May 28, 1968 2 Sheets-Sheet 1

FIG. 1

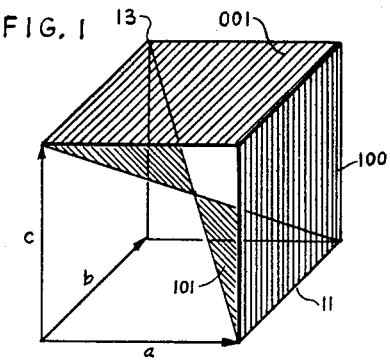

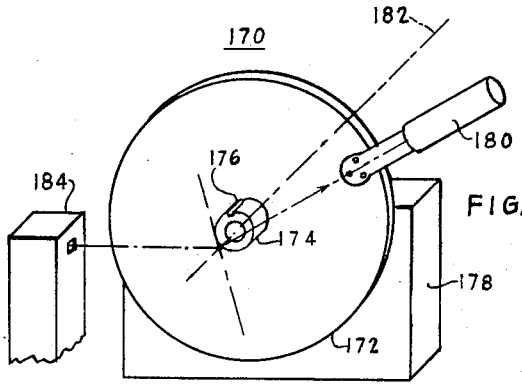

FIG. 5

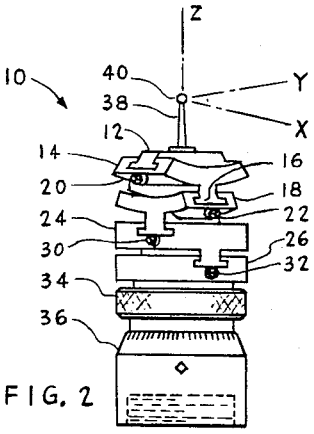

FIG. 2

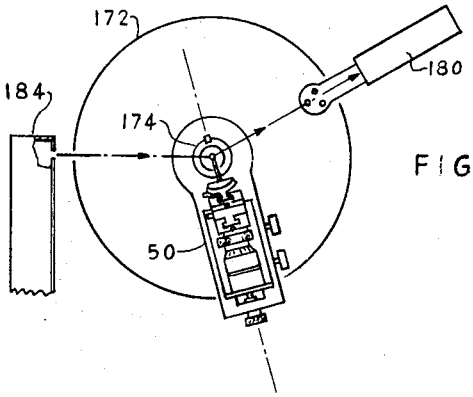

FIG. 6

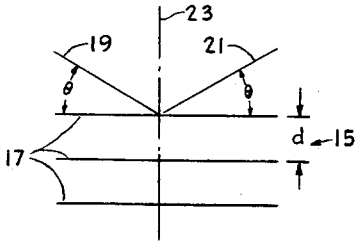

FIG. 4

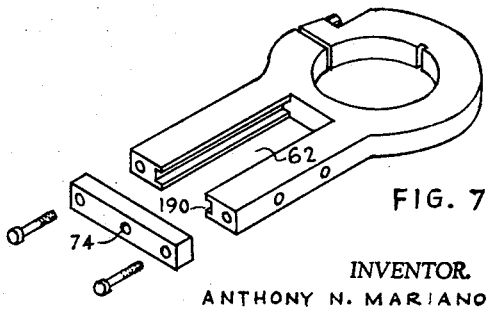

FIG. 7

INVENTOR.
ANTHONY N. MARIANO
BY
Kenway, Jenney & Hildreth