US00D600578S

# (12) United States Design Patent

Tsuji

(10) Patent No.: US D600,578 S
(45) Date of Patent: ** Sep. 22, 2009

(54) **BACTERIA MEASURING INSTRUMENT**

(75) Inventor: **Kaichi Tsuji**, Kusatsu (JP)

(73) Assignee: **Daikin Industries Ltd.**, Osaka (JP)

(**) Term: **14 Years**

(21) Appl. No.: **29/309,272**

(22) Filed: **Jul. 17, 2008**

(30) **Foreign Application Priority Data**

Apr. 2, 2008 (JP) ..... 2008-008448
Apr. 2, 2008 (JP) ..... 2008-008449

(51) **LOC (9) Cl.** ..... **10-04**
(52) **U.S. Cl.** ..... **D10/81**; D24/232
(58) **Field of Classification Search** ..... D10/81; D24/216, 232–234; 356/246, 440, 442; 422/67; 435/29, 34, 283.1, 286.1, 288.7, 303.1, 809
See application file for complete search history.

(56) **References Cited**

U.S. PATENT DOCUMENTS

| | | | | | |
|---|---|---|---|---|---|
| 4,221,867 | A * | 9/1980 | McFadden | 435/32 |
| 4,971,900 | A * | 11/1990 | Ahnell et al. | 435/29 |
| D347,478 | S * | 5/1994 | Pinkney | D24/216 |
| D351,469 | S * | 10/1994 | Okamoto et al. | D24/169 |
| D591,864 | S * | 5/2009 | Schmidt | D24/216 |
| 2004/0219627 | A1* | 11/2004 | Kawashima | 435/29 |
| 2009/0020721 | A1* | 1/2009 | Ohmi et al. | 251/331 |
| 2009/0042267 | A1* | 2/2009 | Park | 435/283.1 |

* cited by examiner

*Primary Examiner*—Antoine D Davis
(74) *Attorney, Agent, or Firm*—Manabu Kanesaka

(57) **CLAIM**

The ornamental design for a bacteria measuring instrument, as shown and described.

**DESCRIPTION**

FIG. **1** is a perspective view of a bacteria measuring instrument showing my new design;

FIG. **2** is a front view thereof;

FIG. **3** is a rear view thereof;

FIG. **4** is a plan view thereof;

FIG. **5** is a bottom plan view thereof;

FIG. **6** is a left side view thereof;

FIG. **7** is a right side view thereof;

FIG. **8** is a perspective view of a modified example of the bacteria measuring instrument;

FIG. **9** is a front view of the modified example thereof;

FIG. **10** is a rear view of the modified example thereof;

FIG. **11** is a plan view of the modified example thereof;

FIG. **12** is a bottom plan view of the modified example thereof;

FIG. **13** is a left side view of the modified example thereof; and,

FIG. **14** is a right side view of the modified example thereof.
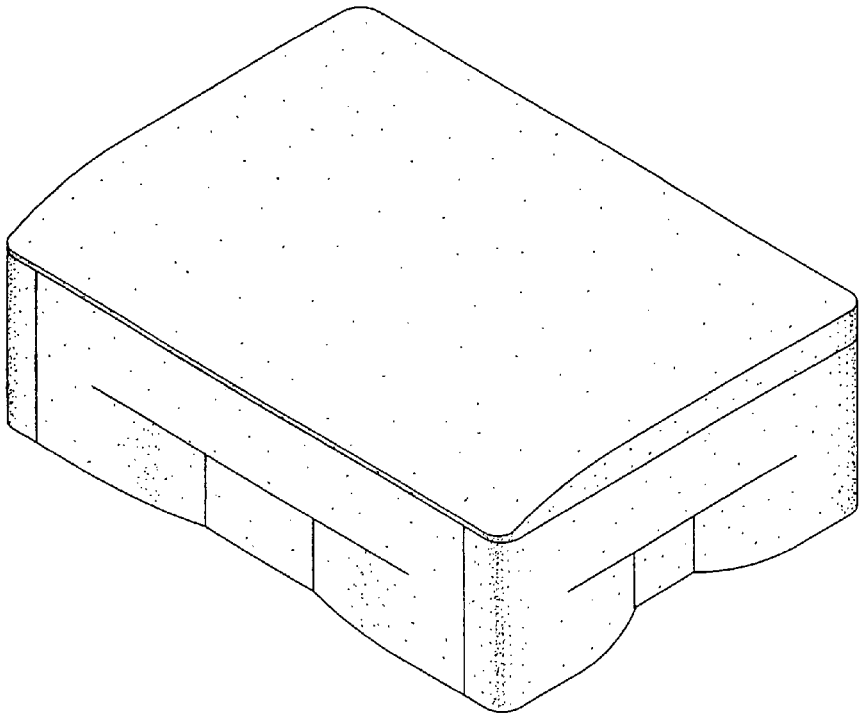
**1 Claim, 12 Drawing Sheets**