MULTICHANNEL FIELD-EFFECT SEMICONDUCTOR DEVICE

Filed June 11, 1968 8 Sheets-Sheet 2

Fig. 4

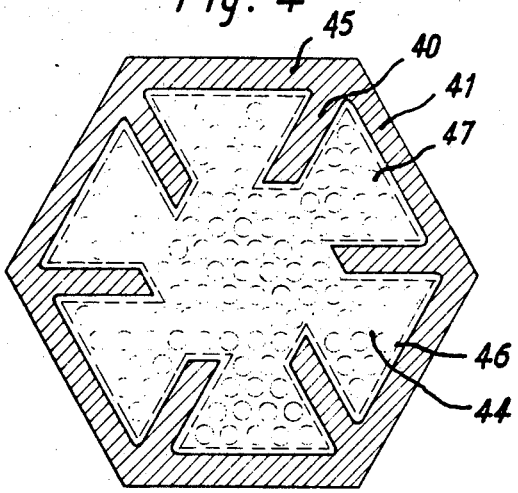

Fig. 5

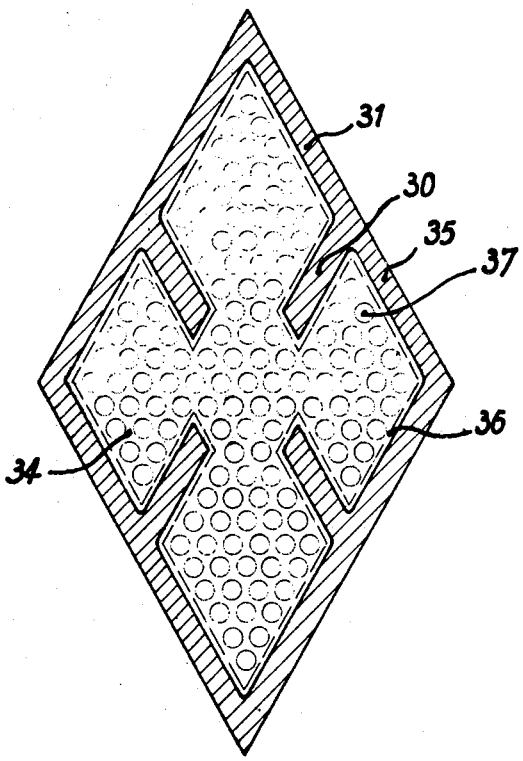

INVENTOR:
STANISLAS TESZNER
By Abraham A. Saffity
Attorney