United States Patent [19]

Drake

[11] **Patent Number: 4,796,977**

[45] **Date of Patent: Jan. 10, 1989**

[54] **UNITARY LCD DISPLAY HOLDER**

[76] Inventor: **George M. Drake,** 8757 Pierpoint Cove, Germantown, Tenn. 38138

[21] Appl. No.: **26,635**

[22] Filed: **Mar. 17, 1987**

[51] **Int. Cl.**[4] **G02F 1/13**

[52] **U.S. Cl.** ..... **350/331 R;** 350/334

[58] **Field of Search** ..... 350/331 R, 334; 339/61 C

[56] **References Cited**

U.S. PATENT DOCUMENTS

3,862,830	1/1975	Stern	350/334
3,910,029	10/1975	Yamazaki	350/334
4,012,117	3/1977	Lazzery	350/334
4,357,061	11/1982	Crosby	350/334
4,367,467	1/1983	Emile, Jr.	350/334
4,422,728	12/1983	Andreaggi	350/334

Primary Examiner—Stanley D. Miller
Assistant Examiner—Huy K. Mai

[57] **ABSTRACT**

A unitary holder of removably mounting and electrically connecting to a visually perceptible display including integral locating and retention means for the display.
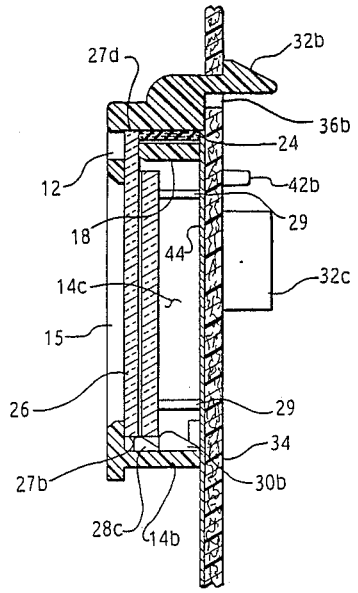
15 Claims, 2 Drawing Sheets