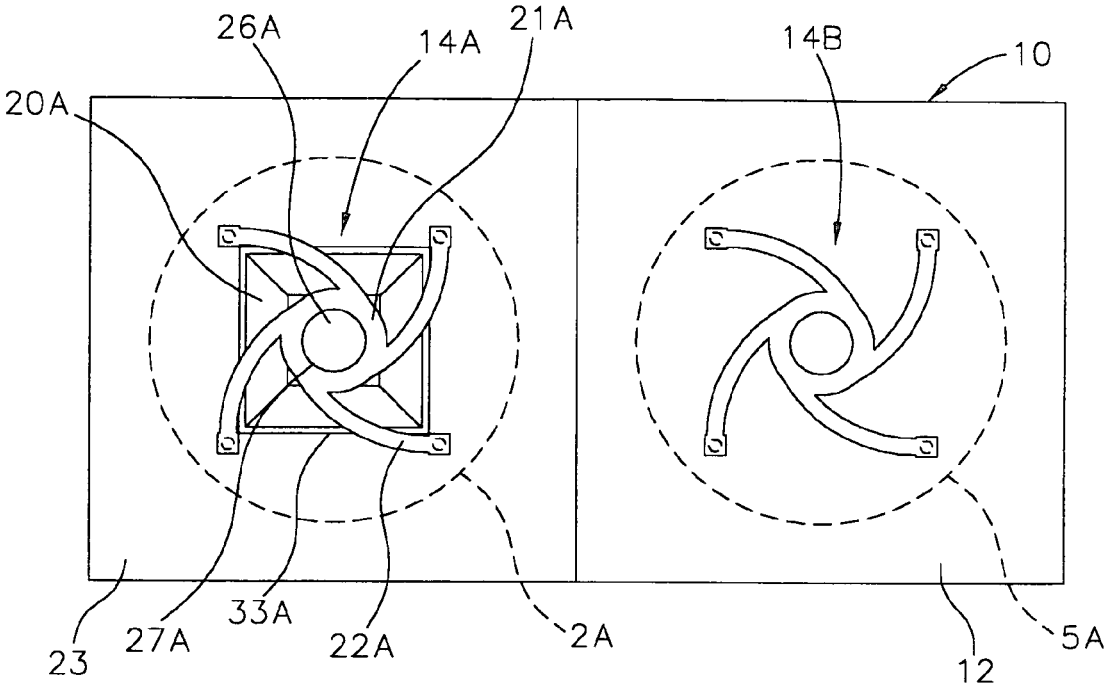

FIGURE 1A

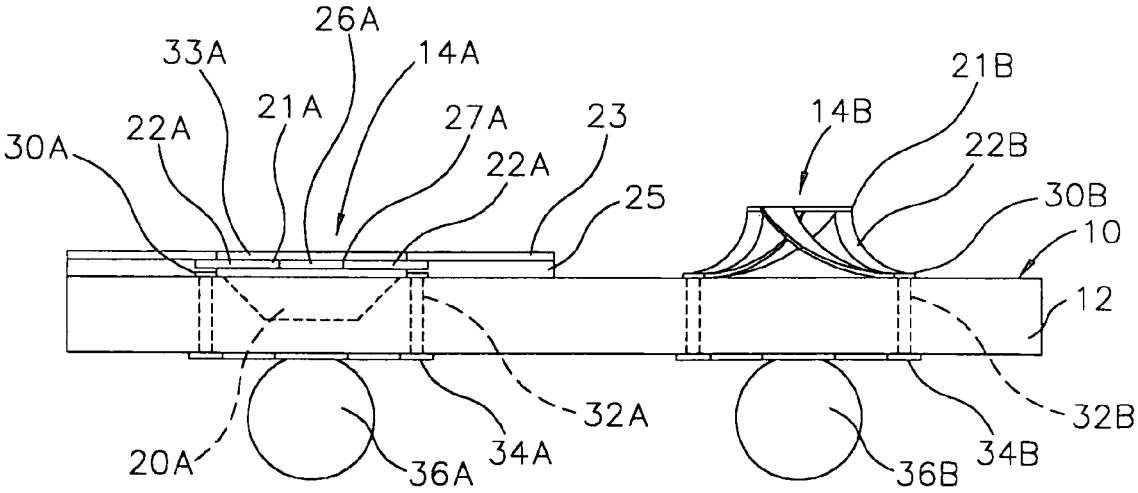

FIGURE 1B