US005881377A

United States Patent [19]

Giel et al.

[11] **Patent Number: 5,881,377**

[45] **Date of Patent: Mar. 9, 1999**

[54] **COMMUNICATION DEVICE AND DISPLAY BLANKING CONTROL METHOD THEREFOR**

[75] Inventors: **James Giel**; **Gary A. Welsch**, both of Palatine, Ill.

[73] Assignee: **Motorola, Inc.**, Schaumburg, Ill.

[21] Appl. No.: **697,747**

[22] Filed: **Aug. 29, 1996**

[51] **Int. Cl.**[6] **H04B 1/16**; H04B 1/40; H04M 11/00

[52] **U.S. Cl.** **455/343**; 455/38.3; 455/574

[58] **Field of Search** 455/343, 38.3, 455/566, 574

[56] **References Cited**

U.S. PATENT DOCUMENTS

D. 305,427	1/1990	Soren et al.	D14/138
3,109,893	11/1963	Burns	379/252
5,010,566	4/1991	Seo	455/566
5,175,759	12/1992	Metroka	455/556
5,204,986	4/1993	Ito et al.	455/343
5,222,076	6/1993	Ng et al.	375/9
5,224,151	6/1993	Bowen	455/569
5,394,166	2/1995	Shimada	345/98
5,446,759	8/1995	Campana, Jr.	375/267
5,463,380	10/1995	Matai	455/343
5,548,832	8/1996	Karam	455/38.3
5,586,182	12/1996	Miyashita	455/566
5,594,951	1/1997	Bellin	455/343
5,606,740	2/1997	Niratsuka	455/343

OTHER PUBLICATIONS

Motorola Cordless Telephone Owner's Manual, pp. 16–17, 1994.

Primary Examiner—Howard Britton
Attorney, Agent, or Firm—John G. Rauch

[57] **ABSTRACT**

A method and apparatus control blanking of a display (**106**) in a communication device (**100**) such as a battery powered radiotelephone. The communication device (**100**) includes a clock operated blanking timer **317**. When the blanking timer **317** elapses, the communication device (**100**) blanks the display (**106**) a predetermined time after a key press of a keypad (**108**). A switch (**310**) detects when the communication device (**100**) is in use. In response to this detection, the communication device (**100**) maintains supply of operating power to the display (**106**), overriding the blanking timer **317**. When a user is holding the communication device (**100**) adjacent to the user's head, an earpiece sensor (**312**) provides an indication of this condition. In response to the indication, the display (**106**) is immediately blanked to conserve operating power in the battery (**124**).
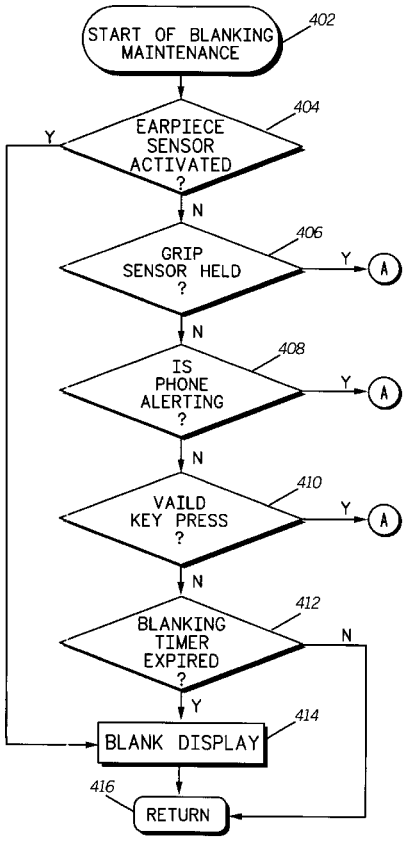
24 Claims, 4 Drawing Sheets