April 6, 1965 J. F. E. ADAMS ETAL 3,177,277

PROCESS FOR THE PRODUCTION OF BIAXIALLY ORIENTED POLYETHYLENE TEREPHTHALATE FILM

Filed May 10, 1957 2 Sheets-Sheet 1

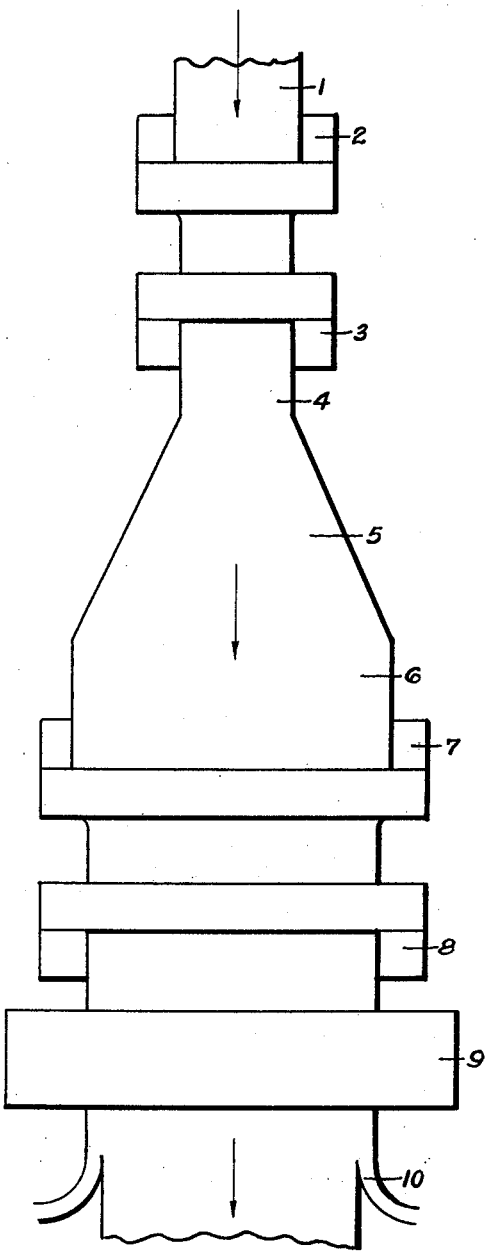

FIG. 1

INVENTORS
JOHN FRANCIS EDWARD ADAMS
KENNETH GEORGE GERBER
WILLIAM ANTHONY HOLMES-WALKER

BY Cushman, Darby & Cushman
ATTORNEYS