US007976577B2

(12) **United States Patent**
Silvestrini

(10) **Patent No.: US 7,976,577 B2**
(45) **Date of Patent: *Jul. 12, 2011**

(54) **CORNEAL OPTIC FORMED OF DEGRADATION RESISTANT POLYMER**

(75) Inventor: **Thomas A. Silvestrini**, Alamo, CA (US)

(73) Assignee: **AcuFocus, Inc.**, Irvine, CA (US)

(*) Notice: Subject to any disclaimer, the term of this patent is extended or adjusted under 35 U.S.C. 154(b) by 1432 days.

This patent is subject to a terminal disclaimer.

(21) Appl. No.: **11/106,043**

(22) Filed: **Apr. 14, 2005**

(65) **Prior Publication Data**

US 2006/0235514 A1 Oct. 19, 2006

(51) **Int. Cl.**
A61F 2/14 (2006.01)

(52) **U.S. Cl.** **623/5.13**

(58) **Field of Classification Search** 623/4.1–5.13, 623/5.16, 6.11, 6.14, 6.17
See application file for complete search history.

(56) **References Cited**

U.S. PATENT DOCUMENTS

564,518	A	7/1896	Heilborn
1,206,132	A	11/1916	Otte
1,959,915	A	5/1934	Guthrie
2,129,305	A	9/1938	Feinbloom
2,714,721	A	8/1955	Stone, Jr.
3,034,403	A	5/1962	Neefe
3,270,099	A	8/1966	Camp
3,339,997	A	9/1967	Wesley
3,458,870	A	8/1969	Stone, Jr.
3,507,566	A	4/1970	Knapp
3,578,850	A	5/1971	Grant
3,600,098	A	8/1971	Mohman
3,726,587	A	4/1973	Kendall
3,794,414	A	2/1974	Wesley
3,852,032	A	12/1974	Urbach
4,010,496	A	3/1977	Neefe
4,073,015	A	2/1978	Peyman
4,099,529	A	7/1978	Peyman
4,138,191	A	2/1979	Peyman
4,191,195	A	3/1980	Miller
4,272,191	A	6/1981	Bergkvist
4,312,575	A	1/1982	Peyman et al.
4,367,949	A	1/1983	Lavering
4,402,681	A	9/1983	Haas et al.

(Continued)

FOREIGN PATENT DOCUMENTS

DE 41 34 320 A1 4/1992

(Continued)

OTHER PUBLICATIONS

Accommodation and Presbyopia. Croft et al. pp. 33-46.

(Continued)

Primary Examiner — William H. Matthews
(74) *Attorney, Agent, or Firm* — Knobbe, Martens, Olson & Bear, LLP

(57) **ABSTRACT**

Disclosed are mask optics configured to be implanted in a cornea of a patient. In one embodiment, the body of the optic has a light transmitting portion, a light blocking portion disposed about the light transmitting portion, and an outer periphery surrounding the light blocking portion. The optic is adapted to reside between two intracorneal layers of a cornea. The mask optic may be formed from a material comprising a highly fluorinated polymeric material and an opacification agent. Preferred highly fluorinated polymeric materials include polyvinylidene fluoride (PVDF) and preferred opacification agents include carbon. The highly fluorinated polymeric material is preferably resistant to degradation upon exposure to ultraviolet light.
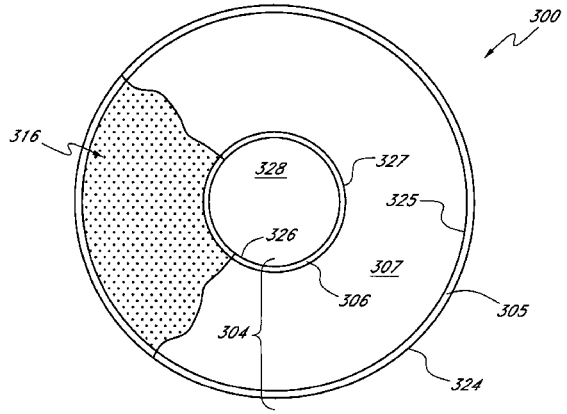
36 Claims, 19 Drawing Sheets