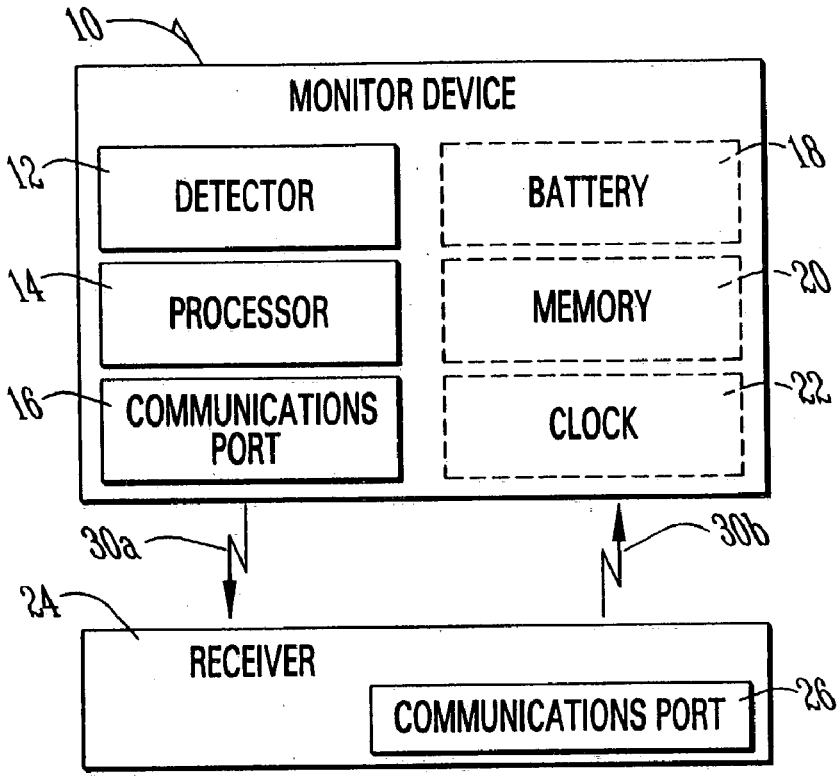
10
MONITOR DEVICE
12
DETECTOR
14
PROCESSOR
16
COMMUNICATIONS PORT
BATTERY
18
MEMORY
20
CLOCK
22
30a
30b
24
RECEIVER
COMMUNICATIONS PORT
26

FIG. 1

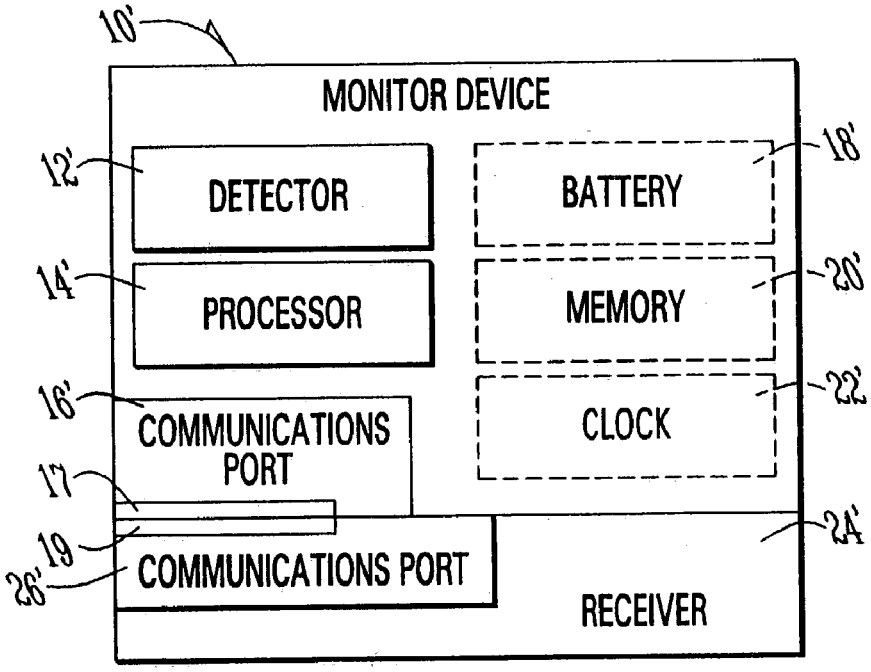
10'
MONITOR DEVICE
12'
DETECTOR
14'
PROCESSOR
16'
COMMUNICATIONS PORT
17
19
26'
COMMUNICATIONS PORT
BATTERY
18'
MEMORY
20'
CLOCK
22'
24'
RECEIVER

FIG. 1A