Nov. 18, 1941. J. M. ROPER 2,262,777

QUICK ACTING POSITIVE CONTACT SWITCH

Filed Sept. 21, 1940

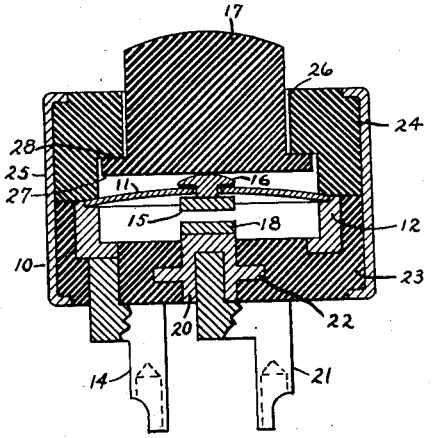

FIG. 1

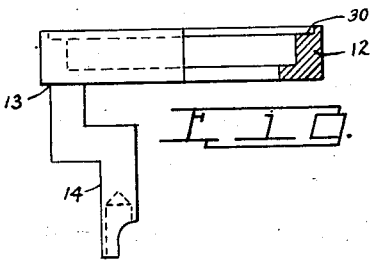

FIG. 2

INVENTOR
JOHN M. ROPER
BY Wilson Jones
ATTORNEY