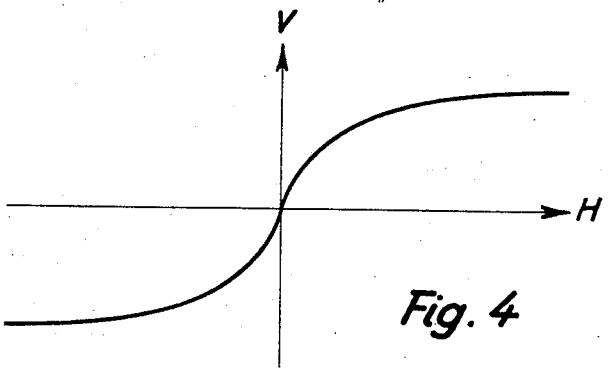

Fig. 4

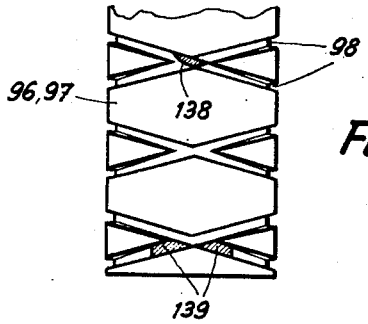

Fig. 6

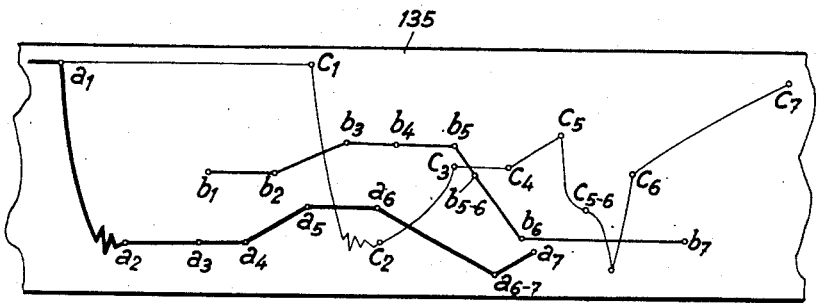

Fig. 7

INVENTOR:
OLAF FALK
BY K. A. Mayr
ATTORNEY.