Nov. 3, 1953 O. FALK 2,657,577

APPARATUS FOR MEASURING THE LEVEL OF LIQUIDS

Filed Nov. 25, 1949 3 Sheets-Sheet 1

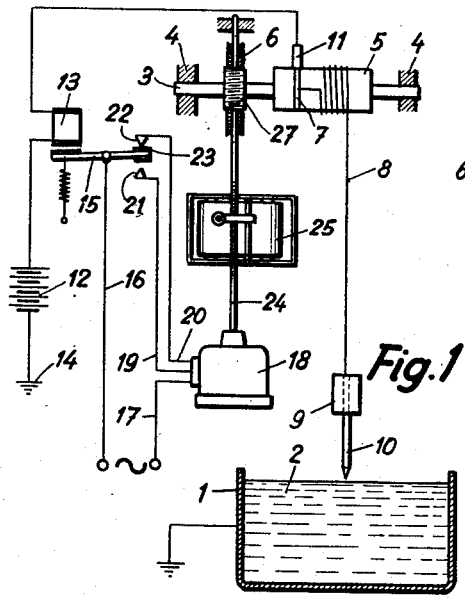

Fig.1

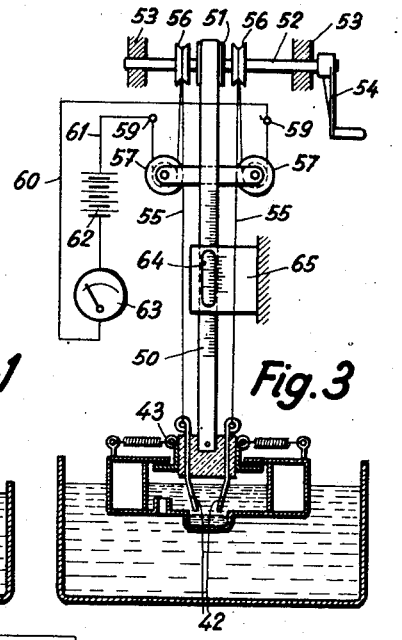

Fig.3

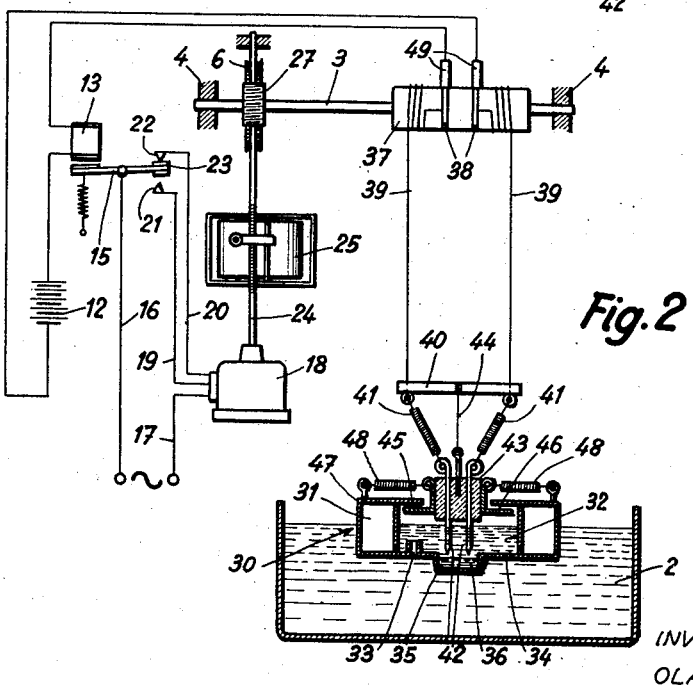

Fig.2

INVENTOR:
OLAF FALK
BY K. A. Mayr
ATTORNEY.