US009636977B2

(12) **United States Patent**
Matsumoto et al.

(10) **Patent No.: US 9,636,977 B2**
(45) **Date of Patent: May 2, 2017**

(54) **REAR VEHICLE-BODY STRUCTURE OF VEHICLE**

(71) Applicant: **MAZDA MOTOR CORPORATION**, Hiroshima (JP)

(72) Inventors: **Kouichi Matsumoto**, Hiroshima (JP); **Takashi Senoo**, Hiroshima (JP); **Masaki Oda**, Aki-gun (JP)

(73) Assignee: **Mazda Motor Corporation**, Hiroshima (JP)

(*) Notice: Subject to any disclaimer, the term of this patent is extended or adjusted under 35 U.S.C. 154(b) by 0 days.

(21) Appl. No.: **14/831,215**

(22) Filed: **Aug. 20, 2015**

(65) **Prior Publication Data**

US 2016/0089966 A1 Mar. 31, 2016

(30) **Foreign Application Priority Data**

Sep. 26, 2014 (JP) 2014-197051
Sep. 26, 2014 (JP) 2014-197053
Sep. 26, 2014 (JP) 2014-197054

(51) **Int. Cl.**
B60J 1/18 (2006.01)
B60J 7/20 (2006.01)
B60J 7/14 (2006.01)

(52) **U.S. Cl.**
CPC ***B60J 1/1823*** (2013.01); ***B60J 7/146*** (2013.01); ***B60J 7/202*** (2013.01)

(58) **Field of Classification Search**
CPC B60J 1/1807; B60J 1/1823; B60J 1/1892; B60J 7/143; B60J 7/146; B60J 7/20; B60J 7/202; B60J 10/90; B60J 7/12; B60J 7/1239; B60J 7/1265; B60J 7/14
See application file for complete search history.

(56) **References Cited**

U.S. PATENT DOCUMENTS

2,762,648 A * 9/1956 Huzzard B60J 1/1823 296/117
3,236,557 A * 2/1966 Podolan B60J 1/1823 296/107.07

(Continued)

FOREIGN PATENT DOCUMENTS

DE FR 1559933 A * 3/1969 ..... B60J 1/1823
DE 19926474 A1 * 12/2000 ..... B60J 7/20

(Continued)

Primary Examiner — Glenn Dayoan
Assistant Examiner — Paul Chenevert
(74) *Attorney, Agent, or Firm* — Studebaker & Brackett PC

(57) **ABSTRACT**

There are provided an openable roof capable of covering over a passenger cabin, a back window provided in back of the openable roof to be apart from a rear end of the openable roof which is in a state in which the openable roof covers over the passenger cabin, a link mechanism connecting the openable roof and the back window to a vehicle body such that the openable roof and the back window swing relative to the vehicle body, a storage room provided in back of the passenger cabin to store the openable roof and the back window, and a shielding member to shield a gap between the openable roof and the back window which are in a state in which the openable roof and the back window cover over the passenger cabin. This shielding member is provided not to be storable in the storage room.
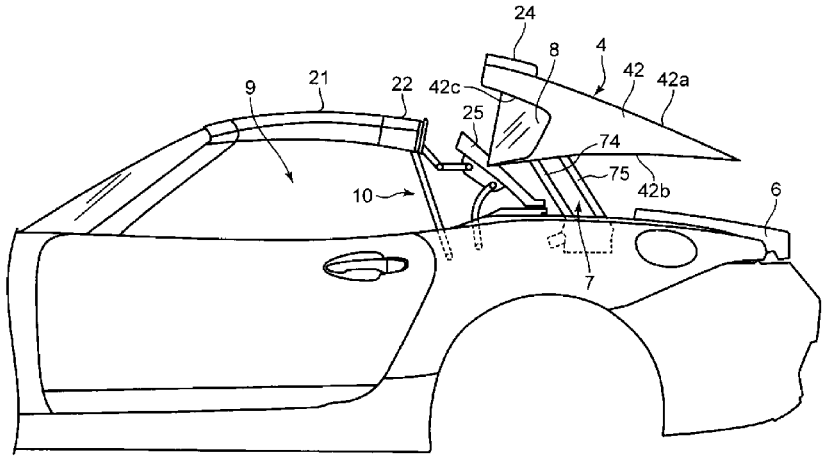
13 Claims, 14 Drawing Sheets