PRIOR ART

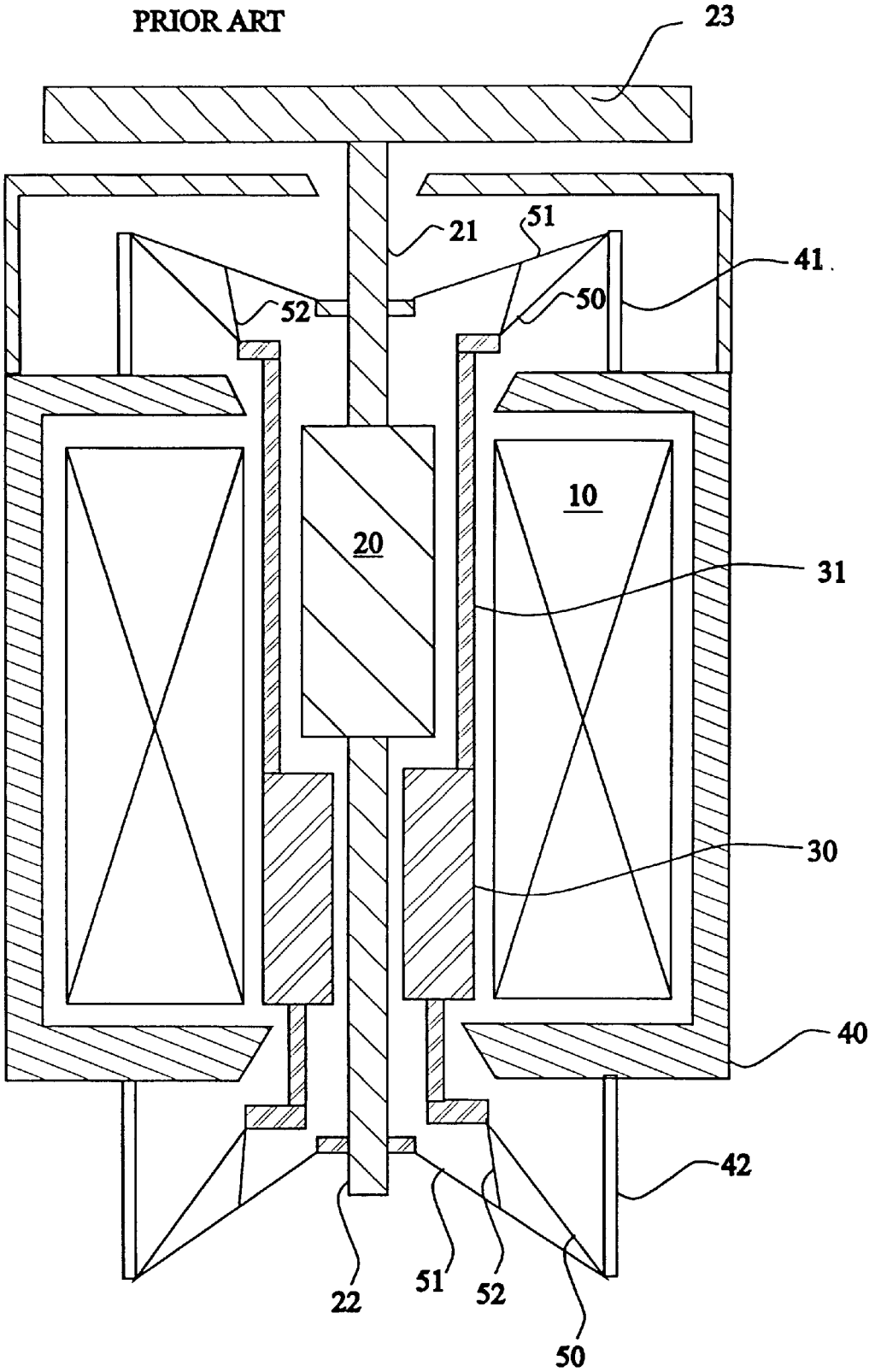

FIG. 1