(No Model.) 3 Sheets—Sheet 1.

S. E. GOODE.

CABINET BED.

No. 322,177. Patented July 14, 1885.

Fig. 1

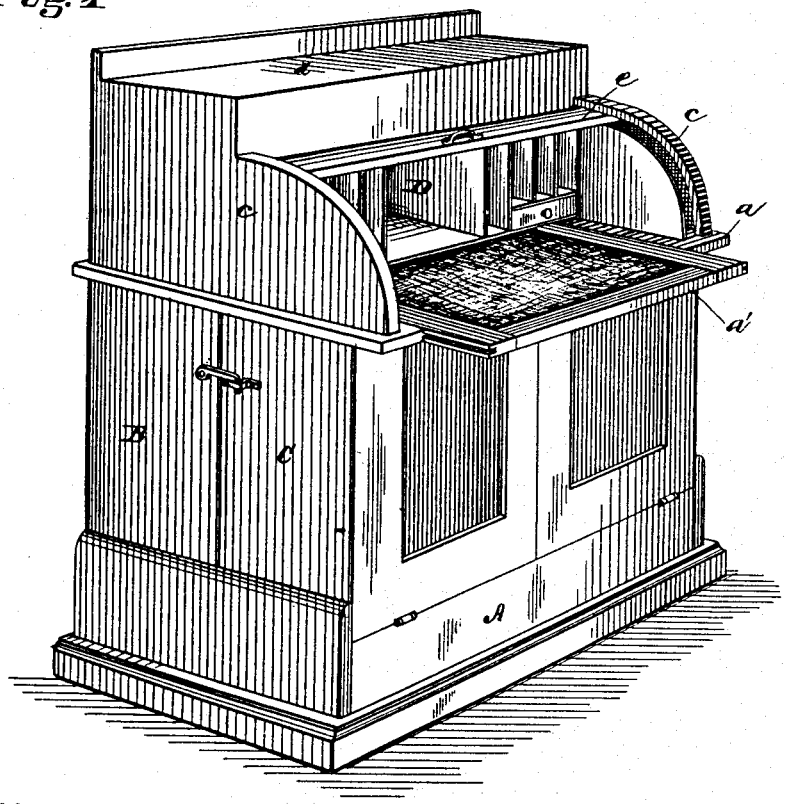

Fig. 2

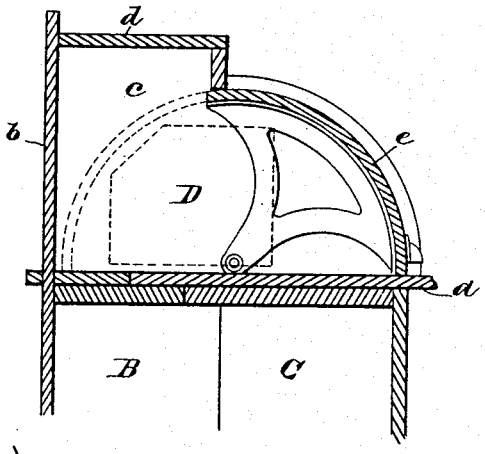

Attest

Paul A. Stalup

A. L. Goode

Inventor

Sarah E. Goode

N. PETERS, Photo-Lithographer, Washington, D. C.