FIG. 1A
PRIOR ART

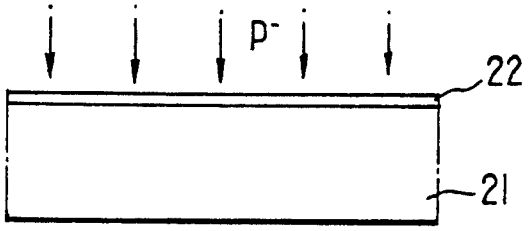

FIG. 1B
PRIOR ART

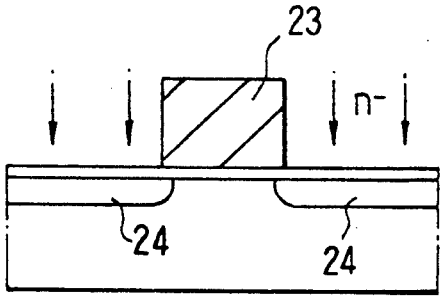
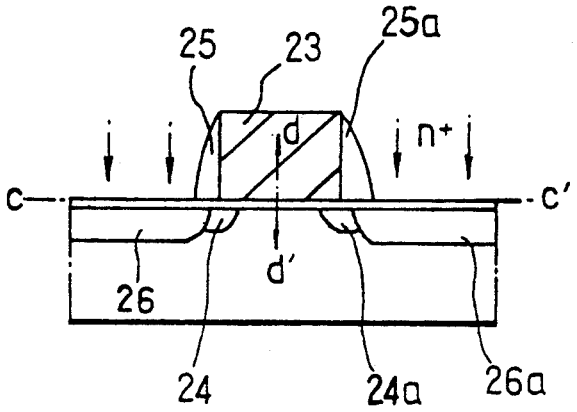
FIG. 1C
PRIOR ART