Sept. 6, 1955 L. B. GODA, SR 2,717,177

SPRAY DEVICE

Filed Sept. 4, 1951 2 Sheets-Sheet 1

Fig. 2

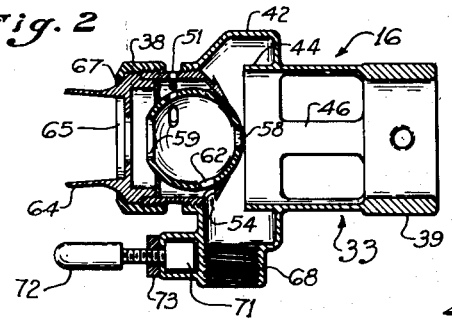

Fig. 1

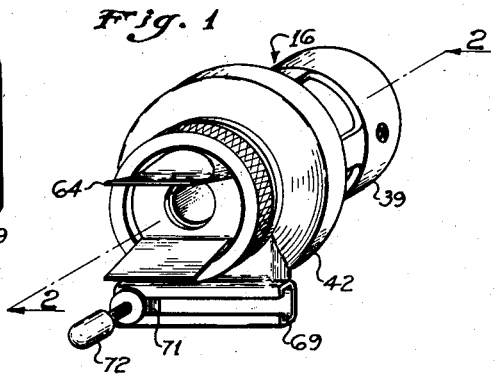

Fig. 3

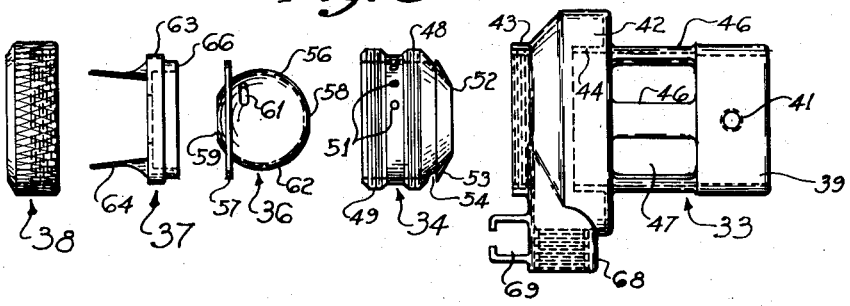

Fig. 4

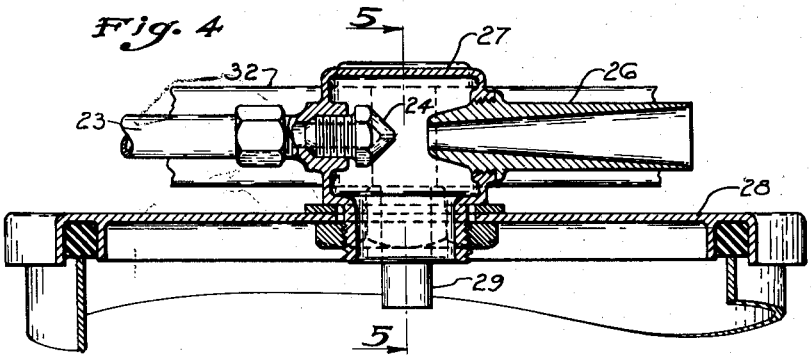

Fig. 5

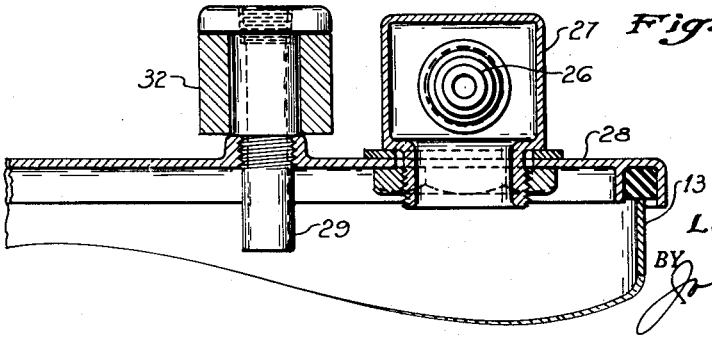

INVENTOR.
Lawrence B. Goda, Sr.
BY John J. McLaughlin