US005811177A

United States Patent [19]

Shi et al.

[11] **Patent Number: 5,811,177**

[45] **Date of Patent: Sep. 22, 1998**

[54] **PASSIVATION OF ELECTROLUMINESCENT ORGANIC DEVICES**

[75] Inventors: **Song Q. Shi**, Phoenix; **Franky So**, Tempe; **Thomas B. Harvey, III**, Scottsdale, all of Ariz.

[73] Assignee: **Motorola, Inc.**, Schaumburg, Ill.

[21] Appl. No.: **565,123**

[22] Filed: **Nov. 30, 1995**

[51] **Int. Cl.**[6] **H05B 33/04**

[52] **U.S. Cl.** **428/209**; 428/201; 428/212; 428/457; 428/690; 428/917; 313/505; 313/506; 313/512; 427/66; 427/258; 427/404; 427/407.1; 427/419.1; 427/419.8; 257/88; 257/100

[58] **Field of Search** 313/500, 505, 313/506, 512; 257/88, 98, 99, 100; 428/690, 917, 201, 209, 212, 457; 427/66, 68, 123, 126.1, 258, 404, 407.1, 419.1, 419.8

[56] **References Cited**

U.S. PATENT DOCUMENTS

4,317,086	2/1982	Scifres et al. .	
4,720,432	1/1988	Van Slyke et al.	428/457
5,059,861	10/1991	Littman et al.	313/503
5,427,858	6/1995	Nakamura et al.	428/421
5,587,589	12/1996	So et al.	257/40
5,652,067	7/1997	Ito et al.	428/690
5,686,360	11/1997	Harvey, III et al.	437/211
5,757,126	5/1998	Harvey, III et al.	313/506

OTHER PUBLICATIONS

Grant & Hackh's Chemical Dictionary, 5th ed., McGraw–Hill, Inc., 1987, p. 422.

Concise Chemical and Technology Dictionary, 4th ed., Chemical Publishing Co., Inc., 1986, p. 866.

Primary Examiner—Marie Yamnitzky

Attorney, Agent, or Firm—Eugene A. Parsons

[57] **ABSTRACT**

A method of passivating electroluminescent organic devices positioned on a supporting substrate including the steps of overcoating or capping the individual pixels, which form an array of electroluminescent organic devices, with a layer of stable metal, overcoating the layer of stable metal with a buffer system including a buffer layer of organic material and a thermal coefficient matching layer on the buffer layer, depositing a low permeability inorganic layer over the thermal coefficient matching layer, and sealing the electroluminescent organic device with an epoxy encapsulant or polymer laminated aluminum foil.
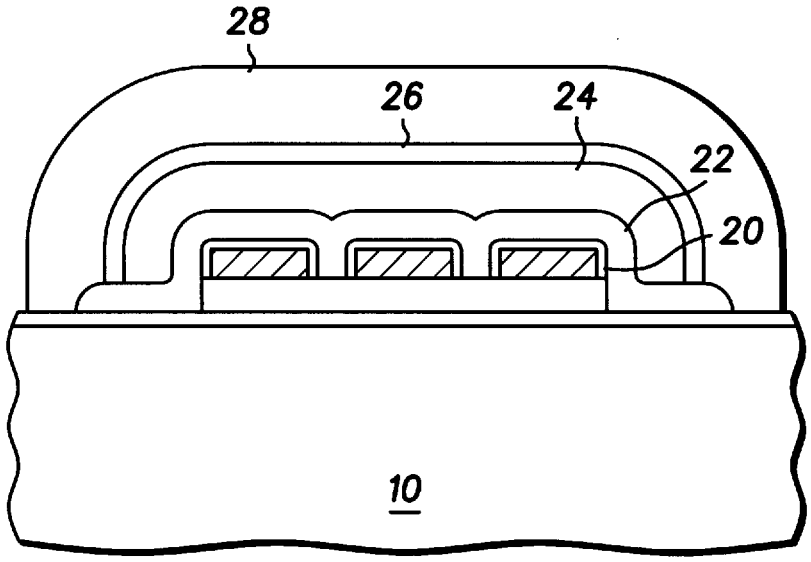
28 Claims, 2 Drawing Sheets